恒源 SINCE1997

上海恒源路桥集团有限公司
Shanghai Hengyuan Road & Bridge Group Co., Ltd.

企业公众号

公司网站

总部/Headquarters
中国 上海浦东新区庆达路705号
No.705 Qingda Road, Pudong New District, Shanghai, China
Service hotline: 400-820-2021
E-mail: info@shhyyj.com
Web: www.shhyyj.com

国际市场部/Department of International Markets
Service hotline: 0086-021-33781259
E-mail: info@shpks.com
Web: www.shpks.com

生产基地/Manufacturing Plants
中国 江苏启东滨海工业园区汇海路1号
No. 1 Huihai Road, Qidong Binhai Industrial Park, Jiangsu, China
E-mail:info@pmpsj.com
Web:www.pmpsj.com

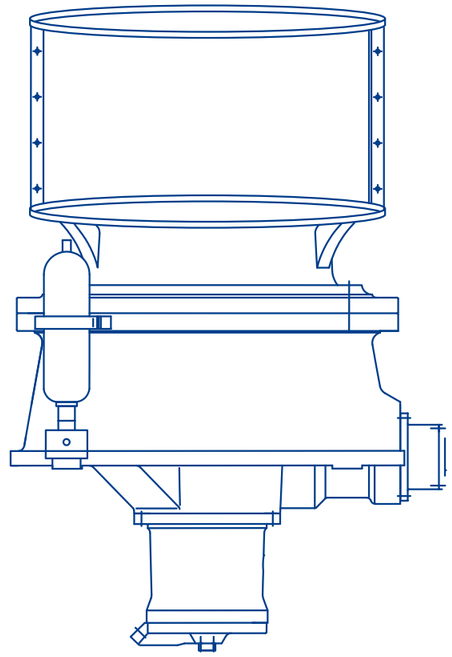

砂石骨料成套设备解决方案
Stone Crushing And Sand Making Plant

上海恒源路桥集团有限公司
SHANGHAI HENGYUAN ROAD & BRIDGE GROUP CO., LTD.

COMPANY PROFILE
公司简介

上海恒源路桥集团有限公司是一家集砂矿破碎筛选设备、机械铸造、机电工程设计、制造、工程安装及国际贸易为一体的大型股份制集团企业，集团公司的前身—上海恒源机械厂于1987年就开始了砂矿石破碎筛分设备、矿山重型机械装备的设计与制造，是国内规模较大、制造经验丰富的大型破碎设备制造企业。

集团下属机械设备公司生产的“山碎”、"Phoenix”牌系列碎石设备、筛分输送设备、磨粉选矿设备等都处于同类产品较高水平，在国内外市场上具有一定的知名度，产品出口至多个国家和地区！

集团下属铸造公司经过30多年磨练，专业从事铸造高铬合金铸件、耐磨件、机床铸件、灰铸铁、球墨铸铁等大型铸造件的生产，产品出口至东南亚、中非、欧美等各个国家，为全球知名矿企及装备制造商提供产品配套服务。

集团下属矿山设备公司与美国黑石科技股份有限公司合资组建，团队负责集团产品的外贸出口业务及国际市场的拓展，开拓中外经济、技术合作，提供砂矿石生产线成套设备的设计定制生产及EPC工程项目总承包业务等项目。

目前，集团公司拥有各类技术和管理人员500余人，位于江苏启东的生产基地占地面积达6万多平米，各种大型加工设备100多台套；产品系列均通过了ISO、CE等国际质量体系认证，取得了产品注册商标证书，并获得了“中国矿山机械行业50强企业”、“上海市科技创新企业”、“AAA质量诚信单位”等一系列资质和荣誉。

未来，我们将继续秉持“诚信、务实、创新、发展”的企业发展理念，提升公司管理体系、严格把控产品质量、提高用户售后服务的满意度，与国内外客户一起合作双赢，共同发展！

Shanghai Hengyuan Road and Bridge Group Co., Ltd. is a large joint-stock group enterprise integrating sand mine crushing and screening equipment, mechanical casting, mechanical and electrical engineering design, manufacturing, engineering installation and international trade. The predecessor of the group company-Shanghai Hengyuan Machinery Factory began the design and manufacture of sand ore crushing and screening equipment and mine heavy machinery equipment in 1987, and it is a large-scale domestic large-scale crushing equipment manufacturing enterprise with rich manufacturing experience.

The "Shansui" and "Phoenix" brand series of crushing equipment, screening conveying equipment, grinding and mineral processing equipment produced by the group's machinery equipment company are all at a high level of similar products, and have a certain reputation in the domestic and foreign markets. Export to many countries and regions!

After more than 30 years of hard work, the foundry company of the group specializes in the production of large castings such as high-chromium alloy castings, wear-resistant parts, machine tool castings, gray cast iron, and ductile iron. The products are exported to Southeast Asia, Central Africa, Europe and the United States and other countries. Provide product support services for world-renowned mining enterprises and equipment manufacturers.

The group's mining equipment company and the United States Black Rock Tech Inc are jointly established. The team is responsible for the export of the group's products and the expansion of the international market. It develops Sino-foreign economic and technical cooperation, provides design and custom production of complete equipment for sand ore production lines, and EPC engineering projects. General contracting business and other projects.

At present, the group company has more than 500 various technical and management personnel, the production base in Qidong, Jiangsu covers an area of more than 60,000 square meters, and more than 100 sets of various large-scale processing equipment; the product series have passed ISO, CE and other international quality System certification, obtained the product registration trademark certificate, and obtained a series of qualifications and honors such as "China's top 50 mining machinery industry enterprises", "Shanghai technological innovation enterprise", "AAA quality integrity unit".

In the future, we will continue to uphold the corporate development concept of "integrity, pragmatism, innovation and development", improve the company's management system, strictly control product quality, and improve customer service satisfaction, and work with domestic and foreign customers to achieve a win-win situation and common development!

CONTENTS 目录

诚信、务实、创新、发展
Integrity, Pragmatism, Innovation, Development

企业概况
COMPANY OVERVIEW

01 公司理念 Company philosophy
03 企业历程 Business history
05 公司架构 Company structure
07 公司荣誉 Honor
09 生产能力 Production capacity
13 服务项目 Service items

产品简介
PRODUCT INTRODUCTION

19 ZSW振动喂料机 ZSW vibrating feeder
21 GZG悬挂给料机 GZG suspension feeder
23 BW/BZ板式给料机 BW/BZ plate feeder
25 HYZ旋回式破碎机 HYZ rotary crusher
27 PV颚式破碎机 PV jaw crusher
29 PE颚式破碎机 PE jaw crusher
31 HD单缸液压圆锥破碎机 HD single cylinder hydraulic cone crusher
36 SC多缸液压圆锥破碎机 SC multi-cylinder hydraulic cone crusher
41 PYF复合液压圆锥破碎机 PYF composite hydraulic cone crusher
43 CF反击破系列 CF counterattack series
45 PF反击破系列 PF counterattack series
47 HB/HX制砂整形机 HB/HX sand making machine
49 PX高效细碎机 PX high efficiency crusher
51 PCKW可逆式无篦条锤式破碎机 PCKW reversible baillless hammer crusher
53 YK圆振动筛系列 YK round vibrating screen series
55 R型摆式磨粉机 R type pendulum mill
59 移动破碎筛分站 Mobile crushing and screening station
63 XL螺旋洗砂机 XL spiral sand washing machine
65 XS轮式洗砂机 XS wheel sand washer
67 TSS脱水筛/细砂回收机 TSS dewatering screen / fine sand recycling machine
69 HYQM/DMC脉冲除尘器 HYQM/DMC pulse dust collector
71 NE/TH斗式提升机 NE/TH bucket elevator

应用案例
APPLICATIONS & CASES

73 高速公路砂石骨料案例 Expressway sandstone aggregate case
75 湿法制砂案例 Wet sand making case
77 干法制砂案例 Dry sand making case
79 花岗岩破碎案例 Granite crushing case
81 石灰石破碎案例 Limestone crushing case
83 玄武岩破碎案例 Basalt crushing case
85 河卵石制砂案例 River pebble sand case
87 铁矿石破碎案例 Iron ore crushing case
89 移动破碎站案例 Mobile crushing station case
91 磨粉机案例 Mill machine case

COMPANY PHILOSOPHY
公司理念

经营宗旨
Business Purpose

客户至上，诚信为本；
创造价值，服务社会；
用心智造，合作共赢。

Customer first, integrity-based;
Create value and serve the society;
Create with heart, win-win cooperation.

经营理念
Business Philosophy

我们将秉持“诚信、务实、创新、发展”的理念，与国内外客户一起合作双赢，共同发展！

We will uphold the concept of "integrity, pragmatism, innovation and development", and cooperate with customers at home and abroad for a win-win situation and common development!

企业责任
Corporate Responsibility

上海恒源路桥集团有限公司作为一家民营股份制企业，将承担在社会及环境保护方面应该承担的责任，为祖国建设和国家繁荣付出应有的贡献！

As a private joint-stock enterprise, Shanghai Hengyuan Road and Bridge Group Co., Ltd. will assume the responsibilities that it should undertake in social and environmental protection, and make due contributions to the construction of the motherland and the prosperity of the country!

做高标准的企业，做民族的企业，做一个对国家，对社会负责的优秀企业！

Be a high-standard enterprise, be a national enterprise, and be an excellent enterprise that is responsible to the country and the society!

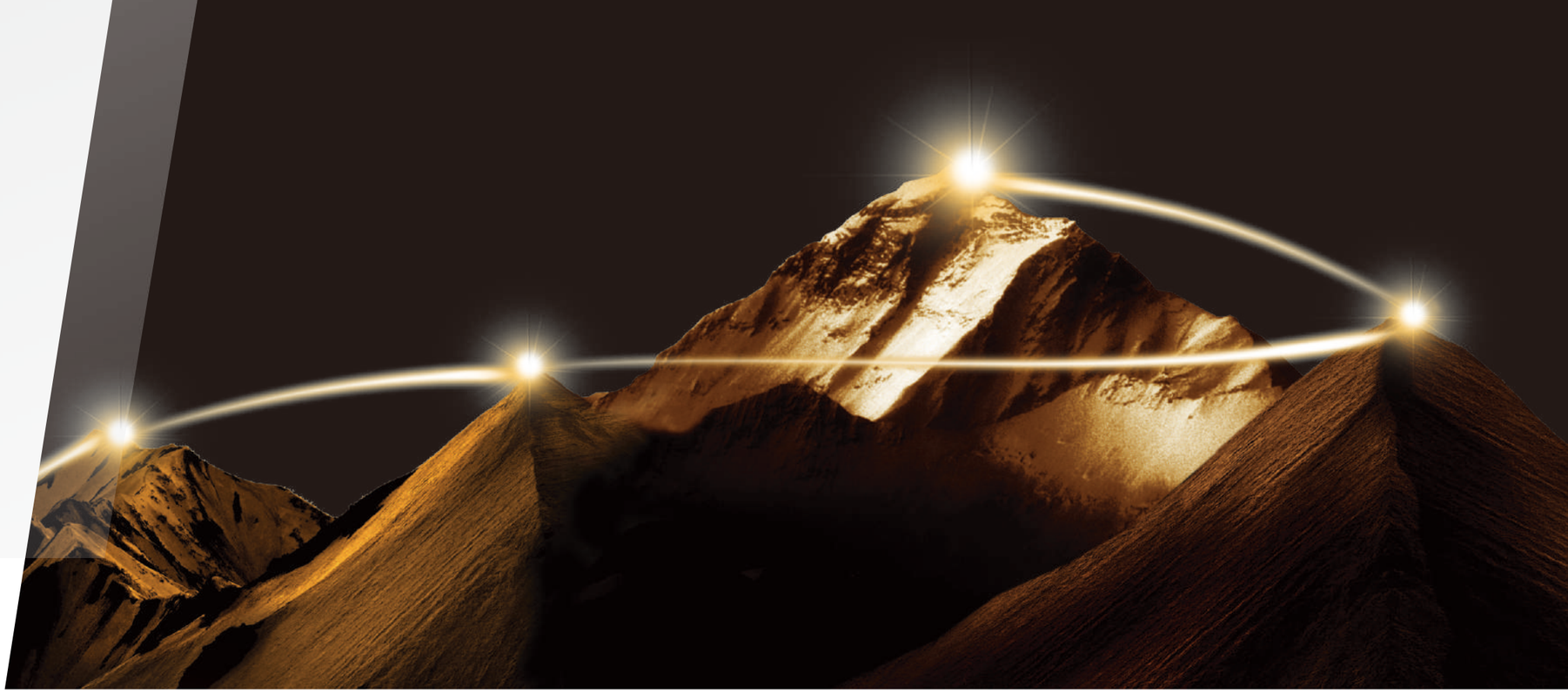

PHOENIX

ENTERPRISE HISTORY
企业历程

2020

5月底成立
上海恒源路桥集团有限公司

2019

2018年底搬迁至江苏启东滨海工业园内，扩大生产基地至6万多平米。

2016

公司进行技术革新，改进设备技术参数，提高设备性能，通过ISO9001:2015认证;

2013

4月打入智利市场，出口成套破碎筛选设备;
6月参加俄罗斯莫斯科建筑工程机械装备展CTT2013;

2011

4月首套水泥生产线出口也门;
10月参加北京BICES工程机械展;
10月11日参加第110届广交会。

2009

8月荣获“质量、信誉、服务AAA级会员单位”;
9月再次荣获中国矿山机械50强”称号;
9月山碎牌系列荣获“中国市场十佳名优品牌”;
10月山碎牌系列荣获“中国驰名品牌”。

2006

上海恒源冶金设备有限公司荣获“中国矿山机械50强”。

1997

1997年，恒源机械厂扩大经营范围，更名为上海恒源冶金设备有限公司，成为多元化集团公司。

1983

合庆机械铸造厂成立，生产矿山机械铸造件。

2020

Shanghai Hengyuan Road and Bridge Group Co., Ltd. was established at the end of May.

2019

At the end of 2018, it moved to Jiangsu Qidong Binhai Industrial Park to expand its production base to more than 60,000 square meters.

2016

The company does not invest in technology, improve equipment technical parameters, improve equipment performance, and pass ISO9001:2015 certification;

2013

Entered the Chilean market in April and exported complete sets of crushing and screening equipment;
In June to participate in Moscow, Russia construction machinery and equipment exhibition CTT2013;

2011

The first set of cement production lines was exported to Yemen in April;;
In October to participate in Beijing BICES Engineering Machinery Exhibition;
October 11 participated in the 110th Canton Fair.
In October, the mountain brand series won the ‘China Famous Brand.’

2009

In August won the ‘quality, credibility, service AAA member unit’;
In September, it was once again awarded the title of’ Top 50 Mining Machinery in China’;
In September, the mountain brand series won the ‘Top Ten Famous Brands in the Chinese Market’;
In October, the mountain brand series won the ‘China Famous Brand.’

2006

Shanghai Hengyuan Metallurgical Equipment Co. Ltd.
Won the’ Top 50 Mining Machinery in China’.

1997

In 1997, Hengyuan Machinery Factory expanded its business scope and changed its name to Shanghai Hengyuan Metallurgical Equipment Co., Ltd., becoming a diversified group company.

1983

Heqing machinery Foundry set up production of mining machinery Foundry.

1997年，恒源机械厂扩大经营范围增加注册资金到1770万元，更名为：上海恒源冶金设备有限公司，成为多元化集团公司。

In 1997, Hengyuan Machinery Factory expanded its business scope to increase the registered capital to 17.7 million yuan, and changed its name to Shanghai Hengyuan Metallurgical Equipment Co., Ltd., becoming a diversified group company.

HENGYUAN R&B GROUP

SINCE1997

服务热线:400-820-2021

ENTERPRISE ARCHITECTURE
公司架构

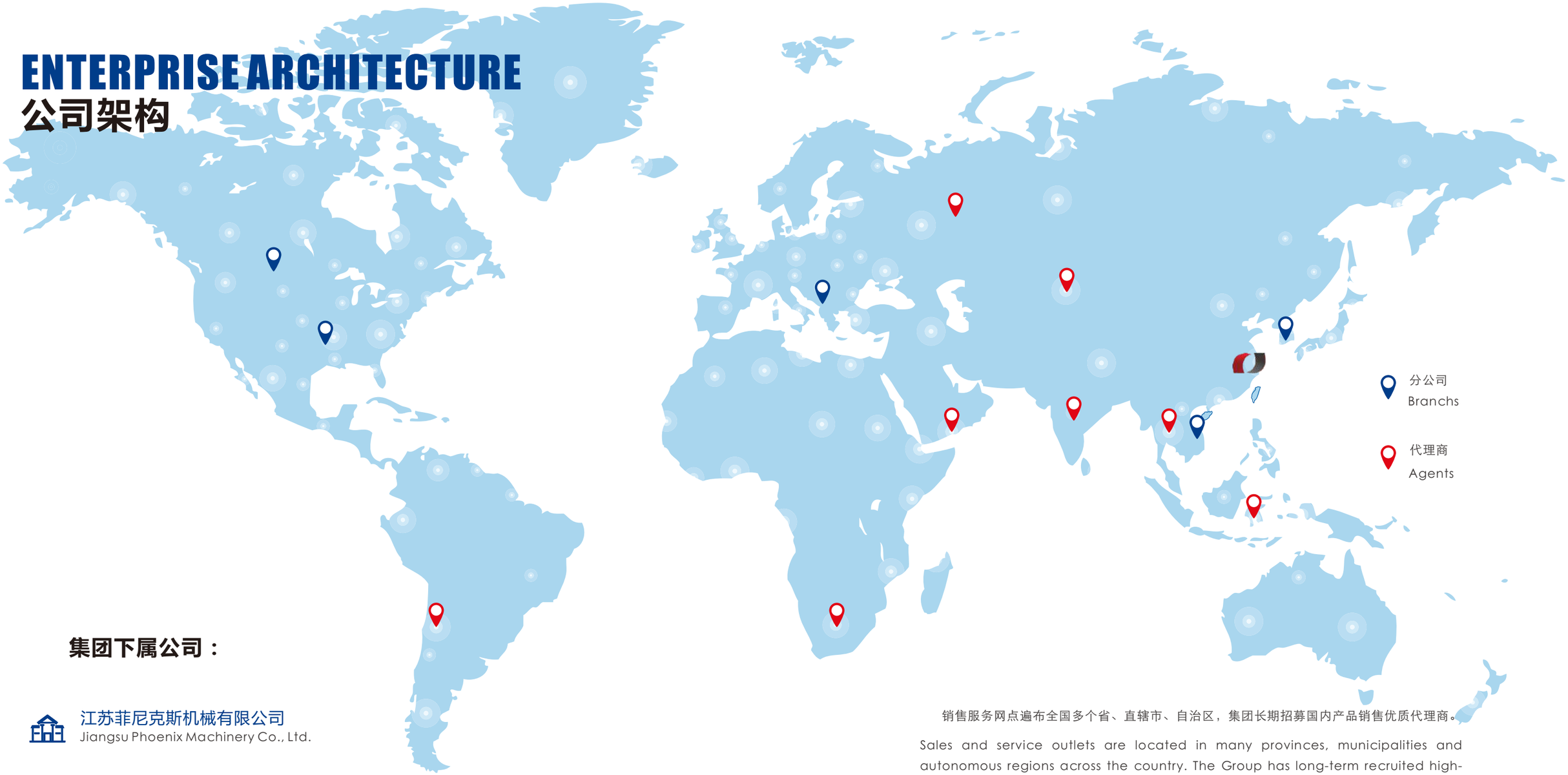

集团下属公司：

江苏菲尼克斯机械有限公司
Jiangsu Phoenix Machinery Co., Ltd.

菲尼克斯矿山设备（上海）有限公司
Phoenix Mining Equipment (Shanghai) Co., Ltd.

江苏沪东机械铸造有限公司
Jiangsu Hudong Machinery Casting Co. Ltd.

销售服务网点遍布全国多个省、直辖市、自治区，集团长期招募国内产品销售优质代理商。

Sales and service outlets are located in many provinces, municipalities and autonomous regions across the country. The Group has long-term recruited high-quality domestic product sales agents.

产品远销世界各个国家和地区，实行全球合作模式发展规划，在欧美和东南亚设有多个分支办事处，以拓展海外业务，提高集团产品销售业绩，扩大品牌知名度。

The products are exported to various countries and regions in the world, the global cooperation model development plan is implemented, and there are multiple branch offices in Europe, America and Southeast Asia to expand overseas business, improve the group's product sales performance, and expand brand awareness.

COMPANY HONOR
公司荣誉

20多年致力于为客户提供多种矿山机械产品和完善的服务，客户的满意是我们衡量一切工作的标准；客户的信任是我们追求的目标；客户的认可是我们不断进取的动力。

More than 20 years of commitment to provide customers with a variety of mine machinery products and perfect services, customer satisfaction is our standard of all work; Customer trust is our goal; Customer recognition is our constant motivation.

中国矿山机械50强
China Mining Machinery Top 50

质量、信誉、服务AAA级会员单位
Quality, Reputation, Service AAA Member Unit

中国驰名品牌
Chinese Famous Brand

荣获2017-2018年度浦东新区“先进企业”称号
Won the title of "Advanced Enterprise" in Pudong New Area 2017-2018

上海市重合同守信用企业
Shanghai Contract-honoring and Credit-keeping Enterprise

获得中国砂石协会理事会员单位
Obtained the board member of China Sandstone

通过ISO9001:2015认证
Passed ISO9001:2015 Certification

PRODUCTION CAPACITY
生产能力

具备高标准的质检检测仪器、高精度数控加工设备、立式综合加工中心、数控铣床、镗床、钻床、刨床、精密数控切割机等，具有较强的生产能力。工厂采取的管理模式为：企业资源计划(ERP)、制造资源计划(MRPII)、准时生产(JIT)、供应链管理(SCM)等现代集团企业管理模式。

With high-standard quality inspection and testing equipment, high-precision CNC machining equipment, vertical comprehensive machining center, CNC milling machine, boring machine, drilling machine, planer, precision CNC cutting machine, etc., with strong production capacity. The management mode adopted by the factory is: modern resource management (ERP), manufacturing resource planning (MRPII), just-in-time production (JIT), supply chain management (SCM) and other modern group enterprise management modes.

技术
TECHNOLOGY

公司注重人才技术培养，目前高学历技术型人才占全体员工人数的70%，定期对员工进行技术培训和现场案例培训，打造出一支技术精湛的售后服务团队。

The company attaches great importance to the cultivation of talents. At present, highly-educated technical personnel account for 70% of the total number of employees. Regular technical training and on-site case training are conducted for employees to create a skilled after-sales service team.

工匠
WORKMEN

以标准严苛的制造标准进行精工智造，不断改进和提升产品工艺设计，把控每个产品制造环节，提高加工制造的精度与细节优化，确保产品品质更稳定。

Carry out precision manufacturing with strict manufacturing standards, continuously improve and upgrade product process design, control each product manufacturing link, improve processing manufacturing precision and detail optimization, and ensure product quality is more stable.

设备
MACHINE

引进高端的现代化设备，打造集信息化、数据化、智能化于一体的数字化生产车间，推进信息技术与制造技术深度融合，以先进的生产力促进加工制造高品质的产品。

Introduce high-end modern equipment, create a digital production workshop integrating information, data and intelligence, promote the deep integration of information technology and manufacturing technology, and promote the processing and manufacturing of high-quality products with advanced productivity.

厂区内景
Factory Interior

加工车间
Processing Workshop

备件 & 成品
Spare Parts & Finished Products

SERVICES 服务支持

公司长期以来一直致力于提供高质量、完善的售后服务，确保用户设备的稳定运行。公司拥有一批资深的设备维护人员，具有丰富的现场经验，能够很好的解决设备各类故障，专业的售后服务团队和良好的用户满意度是我们的一大优势。

本司贯彻执行：“以客户需求为中心”的服务宗旨，对于已经竣工、验收合格的项目进行质量跟踪服务，本着精益求精的工匠精神，向用户奉献一流的技术和一流的维护服务。

The company has long been committed to providing high-quality and perfect after-sales service to ensure the stable operation of user equipment. The company has a group of senior equipment maintenance personnel, with rich on-site experience, can solve all kinds of equipment failures, professional after-sales service team and good user satisfaction are our major advantages.

The company implements the service tenet of "customer needs as the center", provides quality tracking services for projects that have been completed and passed the inspection, and provides first-class technology and first-class maintenance services to users in the spirit of excellence.

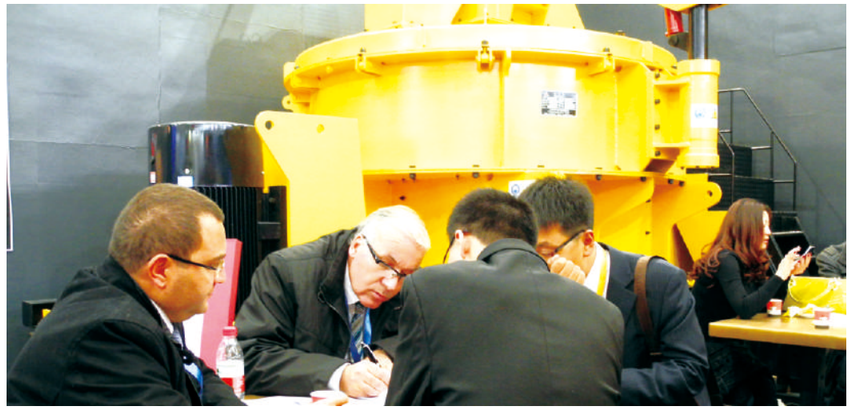

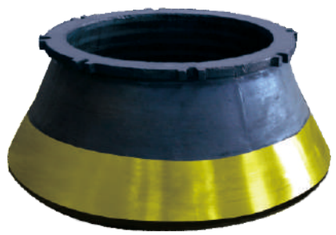

快速供应正品配件
QUICK SUPPLY OF GENUINE ACCESSORIES

我们建立了完善的配件供应体系，拥有大型的配件供应仓库，储备了数百万专业备件，型号齐全。无论何时、何地，只要客户一个电话，我们将快捷供应优质配件，确保客户在第一时间内获得产品使用、维修过程中所需的零配件。

We have established a complete spare parts supply system, a large spare parts supply warehouse, and reserves millions of professional spare parts. Whenever and wherever, as long as the customer has a call, we will quickly supply high-quality accessories to ensure that customers get the spare parts needed for product use and maintenance in the first time.

服务网络战略布局
SERVICE NETWORK STRATEGIC LAYOUT

销售服务网点遍布全国，数百名精通产品、技艺娴熟且经验丰富的服务工程师整装待发，随时为您提供细致入微的贴心服务。

Sales and service outlets all over the country, hundreds of proficient products, skilled and experienced service engineers are ready to go, ready to provide you with meticulous and meticulous service.

精湛的技术专家团队
A SUPERB TEAM OF TECHNICAL EXPERTS

高素质、专业化的服务团队，标准化的服务流程，多样化的服务途径，完善的客户回访管理机制，为广大客户提供全面的技术支持，确保每个客户的项目都能稳定运营。

High-quality, professional service team, standardized service process, diversified service channels, and perfect customer return visit management mechanism provide comprehensive technical support for our customers and ensure that each customer's projects can operate stably.

PHOENIX

服务范围 SCOPE OF SERVICES

- 免费场地勘测 Free site survey
- 物料检测 Material testing
- 市场情况分析 Market situation analysis
- 方案设计 project design
- 投资回报分析 Investment return analysis
- 发货检验试机 Delivery inspection test machine
- 场地规划 Site planning
- 地基建设指导 Guidance on Infrastructure Construction
- 设备安装指导 Guidance on equipment installation
- 生产线管理培训 Production line management training
- 原厂配件供应 Original spare parts supply
- 项目改造 Project renovation

安装培训指导 INSTALLATION OF TRAINING GUIDANCE

我们为客户提供完善的安装培训服务，包括场地平整，地基图纸检验，施工进度及团队规划，对设备安装全程进行指导，并进行生产线试机，确保生产线运行良好，针对客户团队进行细致的操作培训，直到客户满意，我们多年的现场管理经验，让生产线管理不再是难题。

We provide customers with comprehensive installation training services, including site leveling, foundation drawing inspection, construction progress and team planning, guide the entire process of equipment installation, and conduct production line test machines to ensure that the production line runs well, and conduct detailed operation training for the customer team Until customer satisfaction, our many years of on-site management experience makes production line management no longer a problem.

项目管理服务 PROJECT MANAGEMENT SERVICES

我们为每一个项目配置一对一的项目经理，提供专业的项目管理服务，对每一个项目阶段都进行严格的进度管理，确保项目如期完成。

严格的内部生产管理，确保生产如期完成。为客户提供完善的施工进度表及建议，让生产线建设如期完成。

We configure one-to-one project managers for each project, provide professional project management services, and conduct strict schedule management for each project phase to ensure that the project is completed on schedule.
Strict internal production management ensures that production is completed on schedule. Provide customers with perfect construction schedules and recommendations, and complete the production line construction as scheduled.

SERVICE GUARANTEE
服務保障

服务团队365天全天候为您提供及时、有效、专业、规范的服务，您的满意是我们的目标！

The service team provides you with timely, effective, professional and standardized services 365 days a day, your satisfaction is our goal!

30 Min
30分钟内快速响应给予答复
Respond quickly within 30 minutes

12 Mon
发货起12个月内免费维修(易损件除外)
Free maintenance within 12 months from shipment (except for consumables)

365 Day
365天全年无休接受服务请求
365 days a year to receive service requests

24 Hour
24小时内完成工程师派遣
Complete engineer dispatch within 24 hours

服务热线:400-820-2021

SERVICES
服务指南— 一个生命周期无忧服务

NO BEST ONLY BETTER

没有最好，只有更好。为了更好的服务于客户，我们坚持“以客户为中心”的服务理念，不断学习和创新，用卓越的智慧，塑造中国企业新形象。

There is no best, only better. In order to better serve customers, we adhere to the "customer-centric" service concept, continue to learn and innovate, and use outstanding wisdom to shape a new image of Chinese enterprises.

售前

1.根据客户的需求，指导客户配置最为适用的设备型号。
2.为用户规划场地、设计最佳流程和方案。
3.根据客户的特殊要求，设计制造产品。
4.免费派工程技术人员到用户现场指导现场规划，设计最佳安装流程和方案供客户参考。

1. According to the customer's needs, guide the customer to configure the most suitable equipment model.
2. Plan the site, design the best processes and solutions for the user.
3. Design and manufacture products according to customer's special requirements.
4. Freely send engineering and technical personnel to the site to guide on-site planning and design the best installation process and plan for customers' reference.

售中

1.严格按照技术标准生产。
2.按设备试机有关规定试机。
3.产品出厂前的严格检验。
4.依照合同及时组织发货。

1. Produced in strict accordance with technical standards.
2. Test the machine according to the relevant provisions of the equipment test machine.
3. Strict inspection before leaving the factory.
4. Organize shipments in time according to the contract.

售后

建立客户档案，并进行追踪，具体如下：
(1) 建立客户档案，掌握所售设备使用地点、运行状况、回访时间以及联系方式；指派专门的售后服务人员，指导客户安装调试。成套设备安装完毕后，协助客户组织现场生产，达到客户满意。
(2) 对客户热线日常信息及处理进行详细登记保管。
(3) 对已过保修期的设备客户进行通知，并告知设备保养细节。
(4) 对产品质量及服务问题进行统计分析，提升品质服务。
(5) 非质量原因导致的客户投诉，由客户经理配合售后服务人员对人为因素造成的损坏进行问题分析、解释，弥补、修复损坏部位，并对客户操作人员进行操作指导和培训。

Create a customer profile and track it as follows:
(1) Establish customer files, master the location, operation status, return visit time and contact information of the equipment sold; assign special after-sales service personnel to guide customers to install and debug. After the complete set of equipment is installed, assist the customer to organize on-site production to achieve customer satisfaction.
(2) Detailed registration and storage of customer hotline daily information and processing.
(3) Notify the equipment customer who has passed the warranty period and inform the equipment maintenance details.
(4) Conduct statistical analysis on product quality and service issues to improve quality services.
(5) Customer complaints caused by non-quality reasons, the customer manager cooperates with the after-sales service personnel to analyze and explain the damage caused by human factors, make up and repair the damaged parts, and provide operation guidance and training for the customer operators.

A life cycle worry-free service

ZSW VIBRATING FEEDER
ZSW振动喂料机

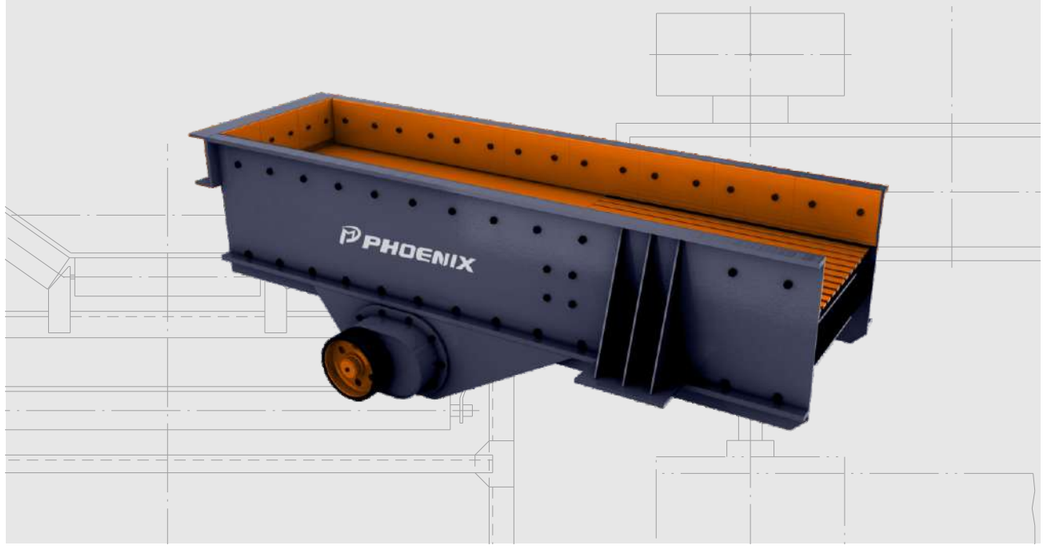

设备简介
Introduction

ZSW振动喂料机可在生产流程中把块状、颗粒状物料从贮料仓中均匀、定时、连续地送到受料装置中去，在砂石生产线中，可为破碎机械连续均匀地喂料，并对物料进行粗筛分，广泛用于冶金、煤矿、选矿、建材、化工、磨料等行业的破碎、筛分联合设备中。

The ZSW vibrating feeder can send the block and granular materials uniformly, regularly and continuously from the storage bin to the receiving device in the production process. In the gravel production line, the crushing machine can be fed continuously and evenly. Material, and coarse screening of materials, widely used in metallurgy, coal mining, mineral processing, building materials, chemicals, abrasives and other industries in the crushing, screening and joint equipment.

工作原理
Working Principle

ZSW和GZD系列振动给料机是由给料槽体、激振器、弹簧支座、传动装置等组成。槽体振动给料的振动源是激振器，激振器是由两根偏心轴（主、被动）和齿轮副组成，由电动机通过三角带驱动主动轴，再由主动轴上齿轮啮合被动轴转动，主、被动轴同时反向旋转，使槽体振动，使物料连续不断流动，达到输送物料的目的。

ZSW and GZD series vibrating feeders are composed of feed trough body, vibration exciter, spring support and transmission. The vibration source of the tank vibration feeding is the vibration exciter. The vibration exciter is composed of two eccentric shafts (main and passive) and a gear pair. The motor drives the driving shaft through the V-belt, and the gear on the driving shaft meshes with the passive shaft. Rotating, the main and passive shafts rotate at the same time, so that the tank body vibrates, so that the material continuously flows to achieve the purpose of conveying materials.

产品参数
Main Specification

型号 Model	料槽尺寸 Hopper Size (mm×mm)	最大进料粒度 Max Feed Size (mm)	处理能力 Feed Capacity (t/h)	偏心轴转速 Eccentric Shaft Speed (r/min)	电机功率 Electric Power (kw)	重量 (不包括电机) Weight (excluding electric motor)(t)	外形尺寸 Overall Dimensions (mm)
GZD-300×90	3000×900	450	40-100		2×2.2	2.64	3050×1430×1550
GZD-370×100	3700×1000	500	100-150		2×3.7	3.69	4250×1874×1130
GZD-430×120	4300×1200	650	200-400		2×5.5	4.2	4955×2206×1120
ZSW-380×96	3800×960	500	100-160	500-714	11	4.2	3882×1684×1340
ZSW-490×110	4900×1100	630	120-280	500-800	15	5.5	4957×2400×2150
ZSW-590×110	5900×1100	630	200-350	750	22	6.1	6000×2500×2150
ZSW-600×130	6000×1300	750	400-560	500-800	30	7.8	6082×2580×2083
ZSW-600×150	6000×1500	1020	460-575	500-800	30	8.7	6086×2662×2186
ZSW-600×180	6000×1800	1200	600-800	500-800	37	11.8	6310×3262×2230

注：规格型号如有变动，恕不另行通知。
Note: Specifications and models are subject to change without notice.

GZG SUSPENSION FEEDER
GZG悬挂给料机

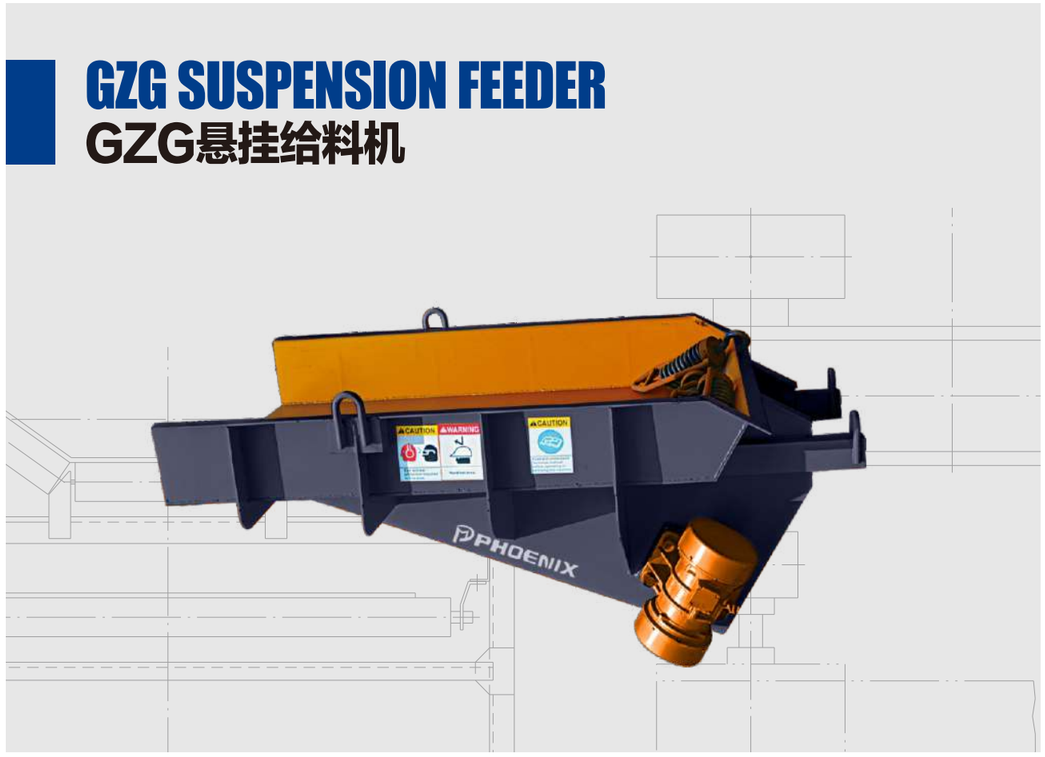

设备简介
Introduction

GZG型系列电机悬挂给料机是我公司工程技术人员精心研制成功的新型给料设备，广泛应用于矿山、冶金、煤炭、建材、化工、电力、粮食等行业，用于把块状、颗粒状及粉状物料从贮料仓或其它贮料设备中均匀、连续或定量地给到受料设备中，适应于自动配料、定量包装和自动控制。该产品体积小、噪音低、重量轻、耗电少、安装维修方便。

GZG series motor suspension feeder is a new type of feeding equipment carefully developed by our company's engineering and technical personnel. It is widely used in mining, metallurgy, coal, building materials, chemical, electric power, grain and other industries for block and granular. And the powdery material is uniformly, continuously or quantitatively fed into the receiving equipment from the storage bin or other storage equipment, and is adapted to automatic batching, quantitative packaging and automatic control. The product is small in size, low in noise, light in weight, low in power consumption, and convenient in installation and maintenance.

产品特点
Features

1. 体积小、重量轻、结构简单紧凑；
2. 安装、维修方便，运行费用低；
3. 效率高，给料能力大；
4. 噪音低，有利于改善工作环境；
5. 耗电小，功率因数高；
6. 本设备在远超共振状态下工作，因而振幅稳定，运行可靠，对各种物料适应性较强；
7. 加配电机调速器后不需调整偏心块即可方便地无级调节给料量。

1. Small size, light weight, simple and compact structure;
2. Easy to install, maintain, low operating costs;
3. High efficiency, large feeding capacity;
4. Low noise is conducive to improving the working environment;
5. Low power consumption, high power factor;
6. The device works in the far super resonance state, so the amplitude is stable, the operation is reliable, and the adaptability to various materials is strong;
7. After adding the motor speed controller, it is convenient to adjust the feeding amount steplessly without adjusting the eccentric block.

产品参数
Main Specification

技术参数 Technical parameters / 项目 Project / 型号 Model		GZG703	GZG1003	GZG1253	GZG1503
槽型尺寸(宽*长*高)Slot size(w*l*h)(mm)		700*1029*250	1000*1750*250	1250*2000*315	1500*2250*300
生产率（t/h）Productivity	水平 level	120	270	460	720
	-10°	170	380	650	1000
最大给料尺寸 Max feed size（mm）		200	300	350	500
震动频率（转/分）Vibration frequency(turn / min)		1450	1450	1450	1450
双振幅（mm） Double amplitude(mm)		4	4	4	3.5
振动器型号 Vibrator model		ZG410	ZG420	ZG432	ZG440
额定电压（伏） Rated voltage(Volt)		380	380	380	380
额定电流 Rated current（A）		2*1.53	2*2.71	2*3.51	2*5.19
电源频率（转）Power frequency(turn)		50	50	50	50
功率 Power （kw）		2*0.55	2*1.1	2*1.5	2*2.2
设备重量 Equipment weight（kg）		389	762	1099	1477

注：规格型号如有变动，恕不另行通知。
Note: Specifications and models are subject to change without notice.

BW/BZ PLATE FEEDER
BW/BZ板式给料机

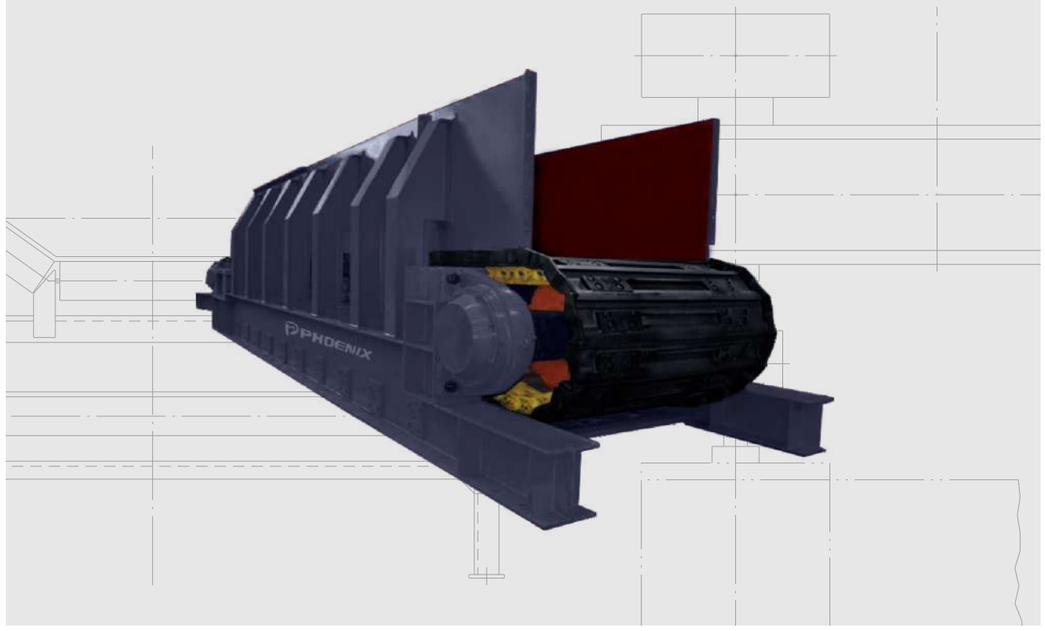

设备简介
Introduction

BW型、BZ型板式给料机（简称板喂机）是一种用散状物料输送设备，把间歇式给料转变为连续性给料。本公司在引进国外先进技术上全新开发的BW型、BZ型板喂机，具有牵引力大、漏料少、运行平稳、使用寿命长和检修方便的优点。作为料仓向初级破碎机连续和均匀给料之用，也可用于短距输送粒度比重较大的物料，可水平安装，也可倾斜安装。主要应用于水泥、建材行业。

BW type and BZ type plate feeder (referred to as plate feeding machine) is a kind of bulk material conveying equipment, which converts batch feeding into continuous feeding. The BW-type and BZ-type board feeding machines newly developed by the company in the introduction of foreign advanced technology have the advantages of large traction, less material leakage, stable operation, long service life and convenient maintenance. As a continuous and uniform feeding of the silo to the primary crusher, it can also be used for short-distance conveying of materials with a large specific gravity, which can be installed horizontally or obliquely. Mainly used in cement and building materials industries.

产品参数
Main Specification

BW 中型板喂机 BW Medium Board Feed

型号 Model	槽板宽度（mm） Slot width	中心距（m） Center distance	给料粒度（mm） Feed granularity	处理能力（t/h） Processing capacity	功率（kw） Power
BW80-L	800	3-15	≤350	0.2-75	2.2
BW100-L	1000	3-18	≤600	18-350	5.5-18.5
BW120-L	1200	4-20	≤600	30-220	11-18.5
BW125-L	1250	4-20	≤800	40-250	11
BW140-L	1400	5-20	≤900	20-200	22
BW150-L	1500	5-20	≤900	40-300	22-30
BW160-L	1600	6-20	≤900	27-300	22
BW180-L	1800	6-20	≤970	30-350	22-55
BW200-L	2000	8-20	≤1500	300-800	45
BW220-L	2200	8-20	≤1500	150-820	45
BW230-L	2300	8-20	≤1500	200-600	45
BW240-L	2400	8-20	≤1500	220-680	45
BW250-L	2500	10-20	≤1500	1250	45

BZ 重型板喂机 BZ Heavy Board Feed

型号 Model	槽板宽度（mm） Slot width	中心距（m） Center distance	给料粒度（mm） Feed granularity	处理能力（t/h） Processing capacity	功率（kw） Power
BZ160-L	1600	6-20	≤800	≤270	30-45
BZ180-L	1800	8-20	≤900	≤500	37-55
BZ200-L	2000	8-20	≤1000	≤700	45-75
BZ220-L	2200	8-20	≤1200	≤800	45-75
BZ230-L	2300	8-20	≤1500	≤850	45-90
BZ240-L	2400	10-20	≤1600	≤900	2x37(45)
BZ250-L	2500	10-20	≤1800	≤1000	2x45(55)

注：规格型号如有变动，恕不另行通知。
Note: Specifications and models are subject to change without notice.

HYZ ROTARY CRUSHER
HYZ旋回式破碎机

旋回式破碎机是利用破碎锥在壳体内锥腔中的旋回运动，对物料产生挤压、劈裂和弯曲作用，粗碎各种硬度的矿石或岩石的大型破碎机械。装有破碎锥的主轴的上端支撑在横梁中部的衬套内，其下端则置于轴套的偏心孔中。

The rotary crusher is a large-scale crushing machine that uses crushing motion of the crushing cone in the cone cavity of the casing to cause extrusion, splitting and bending of the material, and coarse crushing of ore or rock of various hardnesses. The upper end of the main shaft equipped with the crushing cone is supported in the bushing in the middle of the beam, and the lower end is placed in the eccentric hole of the bushing.

产品特点
Features

1.架体采用高强度铸钢材质，安全系数高。即使在非常恶劣的破碎环境下,也能够保证无故障运行。
2.重型化主轴，采用高强合金钢材质，主轴外衬锰钢衬套。动锥出现磨损后，只需更换衬套，便捷、成本低。
3.液压支撑结构，可以实现过载保护和调整排料口尺寸的功能。
4.主轴位置指示仪可以实现对主轴的实时监控，精确显示主轴位置，并通过液压系统调节排矿口的大小。
5.空气密封风系统，有效密封偏心套及大小齿轮，同时该系统配有空气过滤装置，能够确保进入的空气干净、无尘。
6.采用电动干油润滑泵，该装置能定时、自动的润滑横梁部轴承。
7.整机采用PLC集中控制，实现高度自动化控制。

1. The frame body is made of high-strength cast steel with high safety factor. Even in very harsh and shattered environments, trouble-free operation is guaranteed.
2. Heavy-duty spindle, made of high-strength alloy steel with spindle-lined manganese steel bushing. After the moving cone is worn out, it is only necessary to replace the bushing, which is convenient and low in cost.
3. Hydraulic support structure, which can realize overload protection and adjust the size of discharge opening.
4. The spindle position indicator can realize real-time monitoring of the spindle, accurately display the spindle position, and adjust the size of the discharge port through the hydraulic system.
5. The air-sealed air system effectively seals the eccentric sleeve and the large and small gears. At the same time, the system is equipped with an air filter device to ensure that the incoming air is clean and dust-free.
6. The electric dry oil lubrication pump is used, which can lubricate the beam bearing regularly and

产品参数
Main Specification

型号规格 Model specification	HYZ0909	HYZ0913	HYZ0917	HYZ1216	HYZ1221	HYZ1417
进料口尺寸(mm) Feed port size	900	900	900	1200	1200	1400
排料口尺寸(mm) Discharge port size	90	190	170	160	210	170
最大进料尺寸(mm) Maximum feed size	750	750	750	1000	1000	1200
处理能力(t/h) Processing capacity	380-510	625-770	815-910	1250-2000	1560-2100	1750-2300
电机功率(Kw) Motor power	210	210	210	310	310	430-400
电机转速（r/min) Motor speed	735	735	735	590	590	590
电机电压（v) Motor voltage	380	380	380	6000	6000	3000/6000
外形尺寸(长/宽/高) Dimensions (l*w*h)mm	6600*4000*7500	6600*4000*7500	6600*4000*7500	9000*4700*9000	9000*4700*9000	5400*15400*11700
重量(t) Quality	141	141	141	228.2	229	310

注：规格型号如有变动，恕不另行通知。
Note: Specifications and models are subject to change without notice.

PV JAW CRUSHER
PV颚式破碎机

设备简介
Introduction

PV系列破碎机是我公司结合多年的实践经验，吸收先进技术，利用先进设计手段，研发的新型颚破，该破碎机采用V型腔形，冲程大，破碎性能更好，处理量更大，破碎效率更高，相对PE系列颚破，其产能提高30%，破碎抗压强度不超过320兆帕的各种物料，如石灰石、铁矿石、玄武岩、花岗岩、河卵石、金矿等。本系列产品广泛适用于矿山、冶炼、建材、公路、铁路、水利和化学工业等各领域各种矿石与岩石的初级破碎。

PV series crusher is a new type of boring technology that combines advanced technology and advanced design methods. The crusher adopts V-shaped cavity shape, large stroke, better crushing performance and larger processing capacity. The crushing efficiency is higher. Compared with the PE series, the production capacity is increased by 30%, and the crushing compressive strength does not exceed 320 MPa, such as limestone, iron ore, basalt, granite, river pebble, gold ore. This series of products is widely used in the primary crushing of various ores and rocks in various fields such as mining, smelting, building materials, roads, railways, water conservancy and chemical industry.

工作原理
Working Principle

电动机通过皮带和皮带轮，带动动颚总成按预定轨迹做往复运动。当动颚上升时肘板和动颚间夹角变大，从而推动动颚板向定颚板靠近，与此同时物料被挤压、搓碾等多重破碎。当动颚下行时，肘板和动颚间夹角变小，动颚板在拉杆、弹簧的作用下离开定颚板，已破碎物料从排料口排出。

The motor drives the moving jaw assembly to reciprocate according to a predetermined trajectory through the belt and the pulley. When the moving jaw rises, the angle between the bracket and the moving jaw becomes larger, thereby pushing the moving jaw to approach the fixed jaw, and at the same time the material is crushed, crushed and the like is broken. When the moving down, the angle between the bracket and the moving jaw becomes smaller, the moving jaw leaves the fixed plate under the action of the pull rod and the spring, and the broken material is discharged from the discharge opening.

产品参数
Main Specification

型号 Type	PV710	PV912
给料口尺寸(mm) Feed port size	760×1060	900×1200
最大给料尺寸(mm) Maximum feed size	500	800
排料口宽度(mm) Loading port width	75-200	154-250
主轴转速(r/min) Spindle speed	250	240
电机功率(kw) Motor power	110	132
电机转速(r/min) Motor speed	750	1000
主机外形尺寸（长x宽x高）(mm) Mainframe external dimensions(l*w*h)	2546×1826×2250	4456×2198×3411
主机重量（包括电机）(kg) Main weight(Including motor)(kg)	17300	39320

注：规格型号如有变动，恕不另行通知。
Note: Specifications and models are subject to change without notice.

PE JAW CRUSHER
PE颚式破碎机

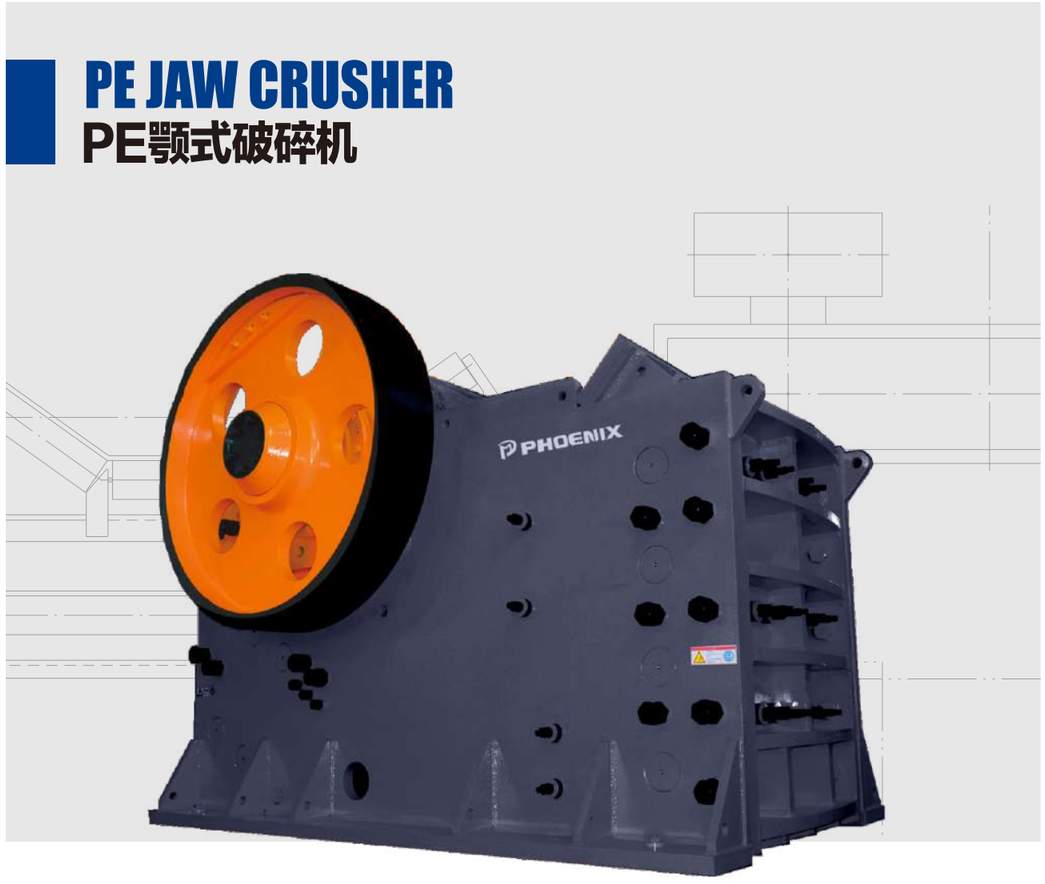

设备简介
Introduction

PE颚式破碎机主要用于对各种矿石与大块物料的中等粒度破碎，也可用于生产路基所需石料以及建筑用的石子骨料。颚式破碎机广泛运用于矿山、冶金、建材、公路、铁路、水利和化工等行业，被破碎物料的最高抗压强度为320Mpa。

The PE jaw crusher is mainly used for medium-size crushing of various ores and bulk materials, as well as stone materials for roadbed construction and stone aggregates for construction. Jaw crushers are widely used in mining, metallurgy, building materials, roads, railways, water conservancy and chemical industries. The highest compressive strength of crushed materials is 320Mpa.

产品特点
Features

1. 深腔颚破，破碎比大；
2. 易损件寿命长，耐磨；
3. 节能环保，粉尘少，噪音小；
4. 制造工艺精密，对于主轴、易损件、轴承之类的核心部件采用了热处理工艺；
5. 大型颚破严格使用焊接架，保证产品使用可靠；
6. 产品都有吊装钩，方便吊装。

1. The deep cavity is broken and the crushing ratio is large;
2. The wearing parts have long service life and wear resistance;
3. Energy saving and environmental protection, less dust and less noise;
4. The manufacturing process is precise, and a heat treatment process is adopted for core components such as spindles, wearing parts and bearings;
5. Large-scale smashing and strict use of welding frame to ensure reliable use of products;
6. The product has lifting hooks for easy lifting.

产品参数
Main Specification

型号 Model	进料口尺寸 Feed Opening (mm)	最大进料粒度 Max Feed Size (mm)	排料口调整围 Discharge Opening Range (mm)	处理能力 Productive Capacity(t/h)	偏心轴转速 Eccentric Shaft Speed (r/min)	电机功率 Electric Power (kw)	重量 Weight (t)	外形尺寸 Overall Dimensions (mm)
PE-150×250	150×250	130	10-40	1-5	300	5.5	0.81	758×758×794
PE-250×400	250×400	210	20-80	5-20	300	15	2.8	1450×1310×1290
PE-400×600	400×600	340	40-100	16-64	275	30	6.5	1560×1730×1580
PE-500×750	500×750	425	50-100	50-100	275	55	10.3	1890×1910×1870
PE-600×900	600×900	500	65-160	50-120	250	55-75	15.5	2300×1840×2290
PE-750×1060	750×1060	630	80-140	115-208	250	110	28	2450×2470×2840
PE-800×1060	800×1060	650	100-200	136-230	250	110	30	2610×2550×2800
PE-870×1060	870×1060	670	200-260	288-336	250	110	30.5	2660×2550×2800
PE-900×1200	900×1200	750	100-200	144-304	200	132	50	3330×3180×3020
PE-1000×1200	1000×1200	850	195-265	315-342	200	132	51	3430×3180×3020
PE-1200×1500	1200×1500	1020	150-300	400-800	180	220	84.9	4200×3730×3840
PE-1500×1800	1500×1800	1200	220-350	450-1000	180	355	122	5160×3660×4248
PEX-250×1000	250×1000	210	25-60	16-52	330	30-37	6.5	1530×1990×1380
PEX-250×1200	250×1200	210	25-60	20-60	330	37	7.7	1900×2100×1430
PEX-300×1300	300×1300	250	20-90	20-85	300	55-75	11	1750×2320×1720
PEX-350×750	350×750	300	15-80	30-52	300	30	6.8	1580×1880×1430

注：规格型号如有变动，恕不另行通知。
Note: Specifications and models are subject to change without notice.

SINGLE CYLINDER HYDRAULIC CONE CRUSHER
HD单缸液压圆锥破碎机

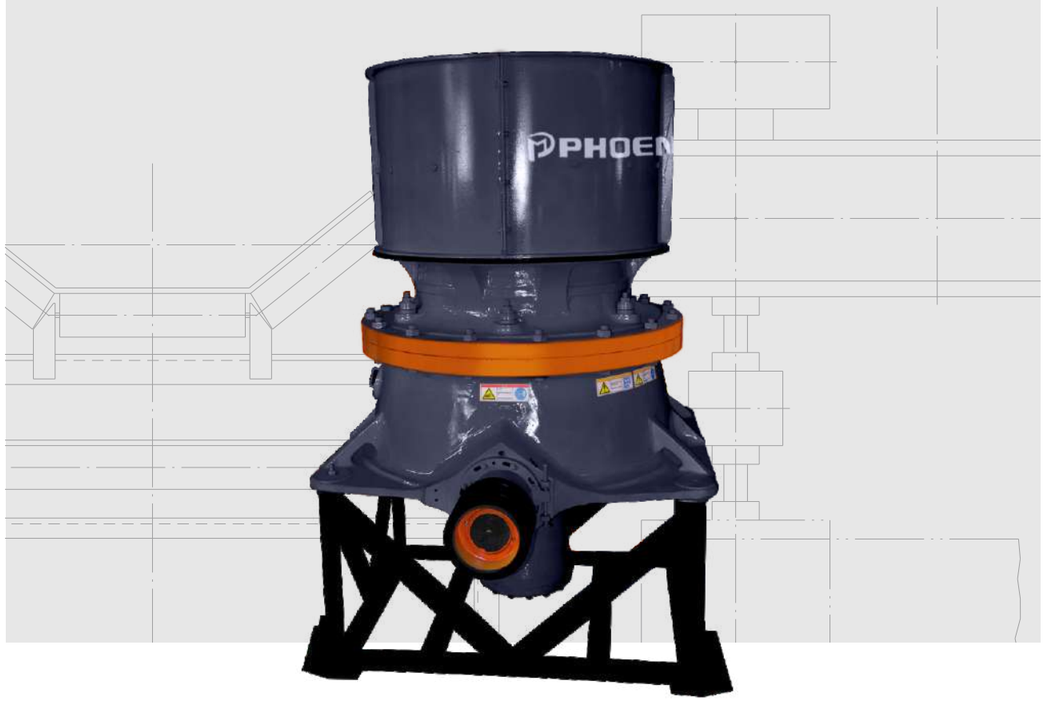

设备简介
Introduction

本公司新型高产能的HD系列单缸液压圆锥破碎机由于其高性能、高效益、可靠性强、性价比高，广泛用于建筑、矿山、建材、冶金、水利等领域。改变了细碎破碎的概念，采用先进的层压破碎技术，使破碎颗粒细小均匀。自动化程度高，合适的偏心距，通过排料口及自动均匀的给料设定，原料在特殊设计的破碎腔内，得到层状压缩破碎。

The company's new high-capacity HD series single-cylinder hydraulic cone crusher is widely used in construction, mining, building materials, metallurgy, water conservancy and other fields due to its high performance, high efficiency, high reliability and high cost performance. Changed the concept of fine crushing, using advanced laminating crushing technology to make the broken particles fine and uniform. High degree of automation, suitable eccentricity, through the discharge opening and automatic uniform feeding setting, the raw material is in the specially designed crushing cavity, and the layer is compressed and broken.

结构组成
Structural Composition

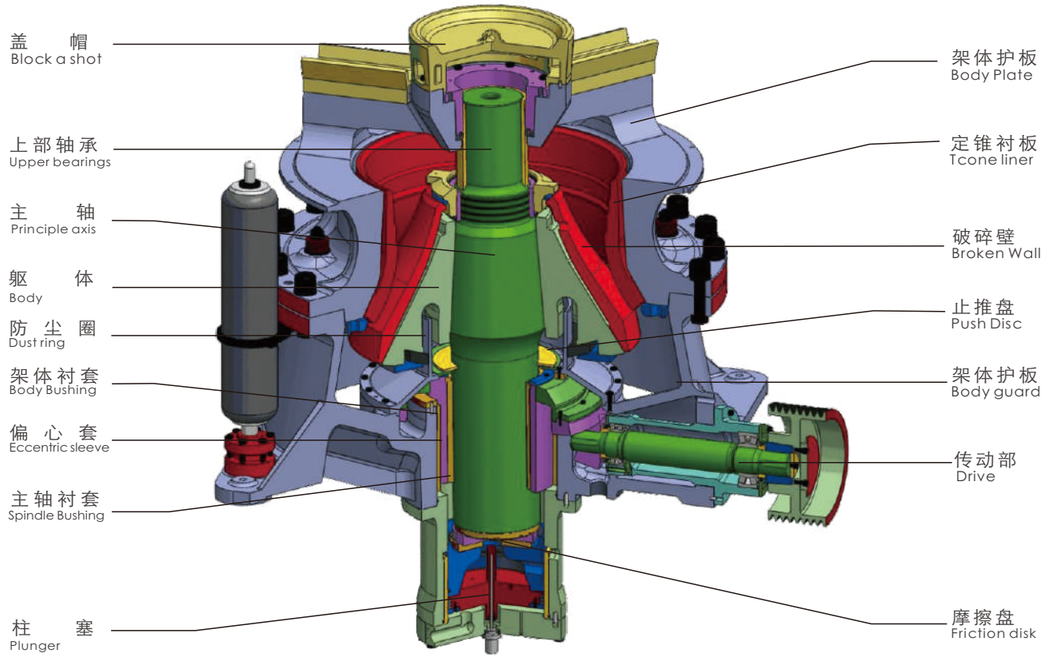

产品特点
Features

1.特殊的破碎腔型、合理的偏心量，理想的摆频及层压缩破碎带来更高的产量，更大的破碎比，更优的粒形。
2.坚固的设备结构及先进的过载保护系统，可确保在最恶劣的硬质岩石破碎应用中长期运行，发生故障率较低。
3.正压防尘系统保证润滑系统时刻洁净，使设备在运行时免受灰尘的污染，且不需要增加额外的润滑密封及人工维护。
4.自动化程度高，操作简单。
5.设备维护方便，大部分部件均能在上部及侧部拆装，可降低工人劳动强度，提高施工效果。
6.特殊的破碎壁，轧臼壁设计，极大减少用户对备件的投入。

1. Special crushing cavity type, reasonable eccentricity, ideal swing frequency and layer compression crushing bring higher output, larger crushing ratio and better granular shape.
2. Sturdy equipment structure and advanced overload protection system to ensure long-term operation in the most difficult hard rock crushing applications, the failure rate is low.
3. The positive pressure dustproof system ensures that the lubrication system is clean at all times, so that the equipment is protected from dust during operation, and no additional lubrication seals and manual maintenance are required.
4. High degree of automation and simple operation.
5. The equipment is easy to maintain, most of the components can be disassembled in the upper part and the side, which can reduce the labor intensity of workers and improve the construction effect.
6. Special broken wall, rolling wall design, greatly reducing the user's investment in spare parts.

中碎粒度曲线
Secondary Cone Crusher Indicative Gradation Curves

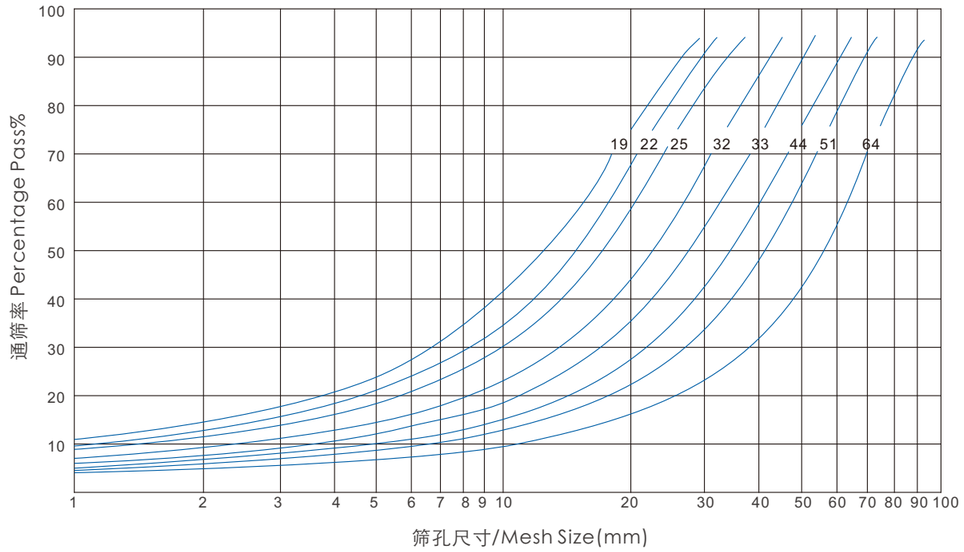

细碎粒度曲线
Tertiary Cone Crusher Indicative Gradation Curves

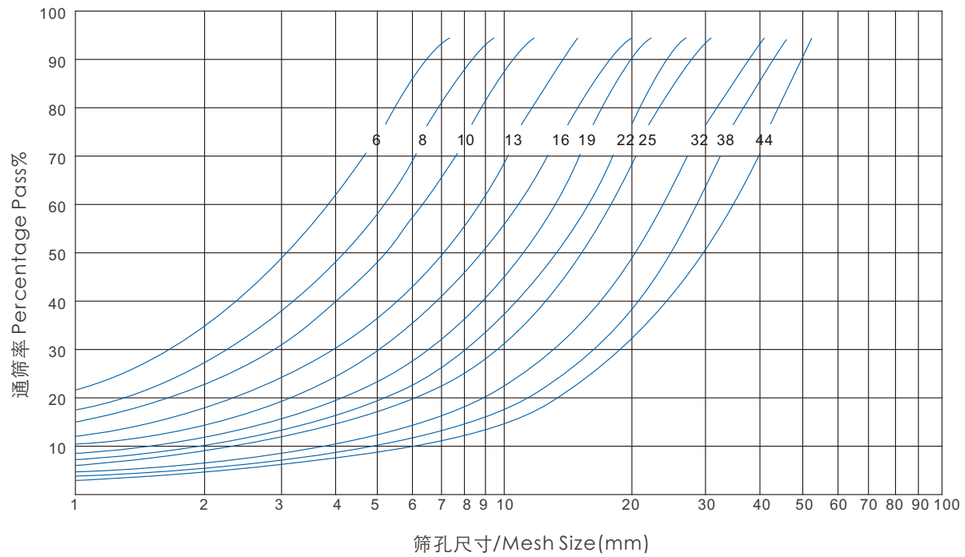

工作原理
Operating Principle

单缸圆锥破碎机工作时：电机带动破碎机的小齿轮，小齿轮带动大齿轮，大齿轮组件（大齿轮、大齿轮架、偏心钢套）带动偏心套组件（偏心缸套、偏心铜套）和主轴组件（主轴、内锥、内锥衬板）以理论垂直线为中心，在铜衬套内公转，主轴组件在偏心铜套内以主轴的中心线可以实现自转。空机运行的时候，偏心套组件“抱着”主轴组件和随大齿轮一同公转，当物料加入到破碎腔后，主轴总成（主轴、内锥）在物料的阻力下在偏心铜套内缓慢的自转。内锥的运行轨迹看起来是在破碎腔内来回摆动，同时缓慢的旋转。物料被摆动的内锥挤压破碎。支撑套与架体连接处靠液压缸压紧，当破碎机内落入金属块等不可破碎物体时，单缸的动锥由底部液压活塞托起，起到排放口调整和过铁保护、反复起落排除堵矿的作用。

When the single-cylinder cone crusher is working: the motor drives the small gear of the crusher, the small gear drives the large gear, and the large gear assembly (large gear, large gear carrier, eccentric steel sleeve) drives the eccentric sleeve assembly (eccentric cylinder sleeve, eccentric copper sleeve) And the spindle assembly (spindle, inner cone, inner cone lining) is centered on the theoretical vertical line and revolves in the copper bushing. The spindle assembly can be rotated in the eccentric copper sleeve with the center line of the main shaft. When the empty machine is running, the eccentric sleeve assembly “holds” the spindle assembly and revolves along with the large gear. When the material is added to the crushing chamber, the spindle assembly (spindle, inner cone) is slowly in the eccentric copper sleeve under the resistance of the material. The rotation. The running trajectory of the inner cone appears to oscillate back and forth within the crushing chamber while rotating slowly. The material is crushed by the inner cone of the swing. The joint between the support sleeve and the frame body is pressed by the hydraulic cylinder. When the crusher falls into a non-crushable object such as a metal block, the single-cylinder moving cone is lifted by the bottom hydraulic piston to adjust the discharge port and protect the iron. Lifting and removing the role of blocking.

PHOENIX

产品参数
Main Specification

型号 Model	功率 Power（kw）	腔型 Chamber Type	最大进料粒度 Max Feedin Size（mm）	紧边排料口下的标准产能 CSS Discharge Opening &Standard Capacity（t/h）										
				6	8	10	13	16	19	22	25	32	38	44	51
HD-44	220	特粗 Extra thick	217	–	–	–	–	115-202	123-279	132-297	140-316	160-360	177-399	–	–
		粗 Crude	177	–	–	–	102	110-220	118-295	126-316	135-336	153-382	169-339	–	–
		中粗 Medium thick	142	–	–	–	98-124	107-266	105-286	122-305	130-325	148-333	163-245	–	–
		中 Medium	112	–	–	–	119-190	128-283	138-303	148-324	157-345	179-286	198	–	–
		中细 Medium fine	87	–	–	117	127-237	137-251	147-269	157-288	167-306	190-254	–	–	–
		细 fine	72	–	83-139	99-181	107-196	115-212	123-227	133-243	141-258	160-214	–	–	–
		特细 Extra fine	40	100	125	–	–	–	–	–	–	–	–	–	–
HD-53	315	特粗 Extra thick	280	–	–	–	–	180	193-344	207-444	220-472	250-557	277-616	303-674	334-520
		标准粗 Standard coarse	250	–	–	–	–	178-198	191-382	204-498	216-530	247-604	273-667	299-532	330-361
		粗 Crude	220	–	–	–	–	175-194	188-376	201-491	214-522	244-596	269-658	295-524	324-361
		中粗 Medium thick	180	–	–	–	–	167-260	179-438	191-468	204-498	232-568	256-513	281-374	–
		中 Medium	140	–	–	–	–	204-306	219-456	234-487	249-519	284-521	313-418	–	–
		中细 Medium fine	120	–	–	–	200	216-385	232-413	247-441	263-470	299-471	332-379	–	–
		细 fine	90	–	–	–	206-320	222-347	238-373	255-398	271-424	309-425	342	–	–
		特细 Extra fine	70	–	–	–	227-316	244-340	263-321	281-312	–	–	–	–	–
HD-870	500		80-330	1、排料口调整范围（Adjustment Range Of Discharge Opening）10-60mm 2、产量（Capacity）500-1200t/h 3、机重（Weight）59t											

型号 Model	功率 Power（kw）	腔型 Chamber Type	最大进料粒度 Max Feedin Size（mm）	紧边排料口下的标准产能 CSS Discharge Opening &Standard Capacity（t/h）										
				19	22	25	29	32	35	38	41	44	48	51
HD-44S	250	特粗 Extra thick	400	–	–	–	–	–	267	282-353	298-446	313-563	334-601	349-534
		粗 Crude	350	–	–	–	225	239-299	254-381	269-484	284-511	298-448	318-398	333
		中粗 Medium thick	300	–	–	195	214-267	228-342	242-435	256-461	270-486	284-426	303-378	317

型号 Model	功率 Power（kw）	腔型 Chamber Type	最大进料粒度 Max Feedin Size（mm）	紧边排料口下的标准产能 CSS Discharge Opening &Standard Capacity（t/h）										
				38	41	44	48	51	54	60	64	70	76	83
HD-53S	315	特粗 Extra thick	450	–	349	368-460	392-588	410-718	428-856	456-929	489-978	525-1050	562-983	604
		粗 Crude	400	318	336-420	353-618	376-753	394-788	411-823	446-892	469-822	504-631	–	–

注：规格型号如有变动，恕不另行通知。
Note: Specifications and models are subject to change without notice.

Professional Focus Concentration Constant Quality
专业 专心 专注 智造恒久品质

SC MULTI-CYLINDER HYDRAULIC CONE CRUSHER
SC多缸液压圆锥破碎机

破碎行程更长、破碎比更大
最终的产品粒度组成更稳定、粒型更优
产量高、能耗低

Longer crushing stroke and larger crushing ratio
The final product particle size composition is more stable and the grain shape is better
High output and low energy consumption

服务热线:400-820-2021

设备简介
Introduction

SC系列液压圆锥破碎机的腔型具有产量高、能耗低的特点。在同样的动锥直径下，破碎行程更长、破碎比更大。在满腔情况下更能利用层压破碎作用，使最终的产品粒度组成更稳定、粒型更优。

自动化的液压过铁释放可立即排放不可破碎物料，双向过铁释放液压缸能够让铁块等不可破碎物料通过破碎腔，而不致卡死停机，过铁释放后能自动返回生产时排料口尺寸。液压清腔系统大的垂直行程可使堵塞物料轻松落下，只需一个按钮即可实现迅速清腔，极大地减少甚至避免了人工清腔的工作量，缩短停机时间，因而最大限度地提高了生产效率。

简单可靠的定锥锁固结构，让破碎机在工作时不会因为环境的振动导致锁紧失效和损坏您的机器，灵活的液压马达和推动缸设计可使您方便地进行排料口的调整。该系列设备采用更方便的衬板固定方式，锁固更可靠，无需填料，极大缩短了更换时间。并且只需更换动定衬板，即可得到不同腔型，实现了柔性化，因而让您的投入得到最大的回报。

The cavity type of SC series hydraulic cone crusher has the characteristics of high output and low energy consumption. At the same moving cone diameter, the breaking stroke is longer and the crushing ratio is larger. In the case of full cavity, the laminating crushing effect can be utilized more, so that the final product particle size composition is more stable and the grain shape is better.

The automatic hydraulic iron release can immediately discharge non-breakable materials. The two-way iron-releasing hydraulic cylinder can make unbreakable materials such as iron blocks pass through the crushing chamber without causing a deadlock. After the iron is released, it can automatically return to the discharge opening size. . The large vertical stroke of the hydraulic clearing system allows the plugging material to be easily dropped, and the quick clearing chamber can be realized with one button, which greatly reduces or even avoids the labor of the manual clearing chamber and shortens the downtime, thereby maximizing production. effectiveness.

The simple and reliable fixed cone locking structure allows the crusher to work without causing locking failure and damage to your machine due to environmental vibration. The flexible hydraulic motor and push cylinder design allows you to easily adjust the discharge opening. . This series of equipment adopts more convenient lining fixing method, which makes the locking more reliable and requires no filler, which greatly shortens the replacement time. And you only need to change the moving lining to get different cavity types and achieve flexibility, so you can get the most return.

结构组成
Structural Composition

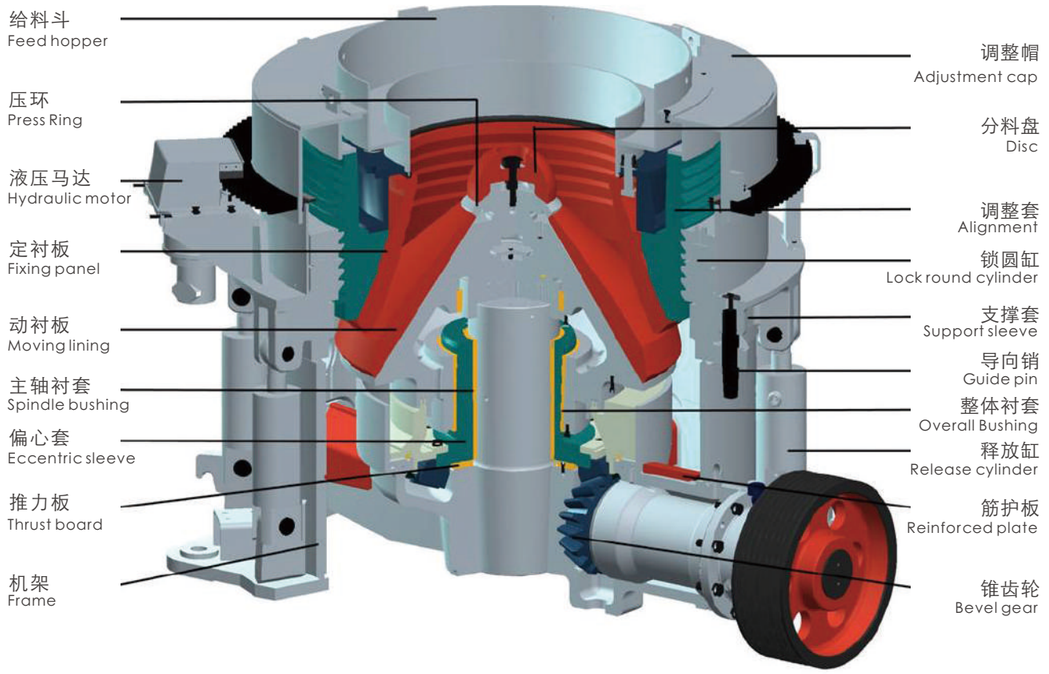

工作原理
Operating Principle

多缸液压圆锥破碎机是通过电动机的旋转带动带轮或联轴器，传动轴和圆锥部在轴心线下使偏心轴做周期性旋摆运动。在矿石从料口进入破碎腔后因受到偏心轴和轧臼壁的相互冲击挤压、研磨、揉搓从而产生破碎的作用。液压保险系统能在机器发生过铁故障或者闷车现象时通过液压将支撑套和定锥部顶排除出故障物，在起到很好的保险作用的同时大大的降低了维修率及提高生产效率。

应用领域：广泛用于矿山、冶金、建材等行业，能破碎各种坚硬的石料和岩石。

适用物料：适合用于破碎各类中硬以上物料的中碎和细碎破碎。

The multi-cylinder hydraulic cone crusher drives the pulley or the coupling, the transmission shaft and the conical portion to rotate the eccentric shaft periodically under the axial line by the rotation of the motor. After the ore enters the crushing chamber from the material inlet, it is crushed by the mutual impact of the eccentric shaft and the rolling wall. The hydraulic safety system can remove the faulty parts of the support sleeve and the fixed cone part by hydraulic pressure when the machine has an iron fault or a boring phenomenon, which greatly reduces the maintenance rate and improves the production efficiency while playing a good insurance function. .

Application: Widely used in mining, metallurgy, building materials and other industries, can break all kinds of hard stone and rock.

Applicable materials: It is suitable for crushing medium and fine crushing of various medium and hard materials.

产品优势
Product Advantages

1. 高强度合金钢精铸、精锻加工而成，坚固耐用，适合中硬以上物料的破碎。

2. 可以在恒定的排料口下进行生产，避免单缸主轴在生产中上下浮动引起排料口的变化。

3. 采用高能层压理论，输入更大的能量，产量更高，易损件相对磨耗少，产品粒形更趋于立方体。

4. 定轴式设计，主轴在运行过程中不动，可获得更大的装机功率，设备重量比传统圆锥大大降低。

5. 双向过铁释放液压缸能够让铁块通过破碎腔，液压清理破碎腔行程大。

6. 定锥衬板可对排料口进行准确调整，简化了衬板更换的工作量。

7. 定锥衬板靠楔块与定锥衬板上部的螺旋斜面配合，形成自锁，提高衬板的可靠性；动锥衬板由自锁式锁紧螺栓紧固

。

1. High-strength alloy steel is made by precision casting and precision forging. It is durable and suitable for the crushing of medium and hard materials.

2. It can be produced under a constant discharge port to avoid the change of the discharge port caused by the single cylinder spindle floating up and down in production.

3. Using high-energy lamination theory, input more energy, higher output, less wear and tear of wearing parts, product grain shape tends to cube.

4. Fixed axis design, the spindle does not move during the operation, can obtain a larger installed power, the weight of the equipment is much lower than the traditional cone.

5. The two-way iron-releasing hydraulic cylinder can make the iron block pass through the crushing chamber, and the hydraulic cleaning of the crushing chamber has a large stroke.

6. The fixed cone lining can accurately adjust the discharge opening, which simplifies the workload of lining replacement.

7. The fixed cone lining is matched with the spiral inclined surface of the fixed cone on the upper part of the fixed cone to form a self-locking to improve the reliability of the lining; the moving cone lining is fastened by a self-locking locking bolt.

8. Can provide greater load capacity.

粒度曲线
Particle Size Curve

粒度分布和生产能力与破碎机腔型、给料粒度、物料可碎性、泥土含量、水分含量等因素有关。

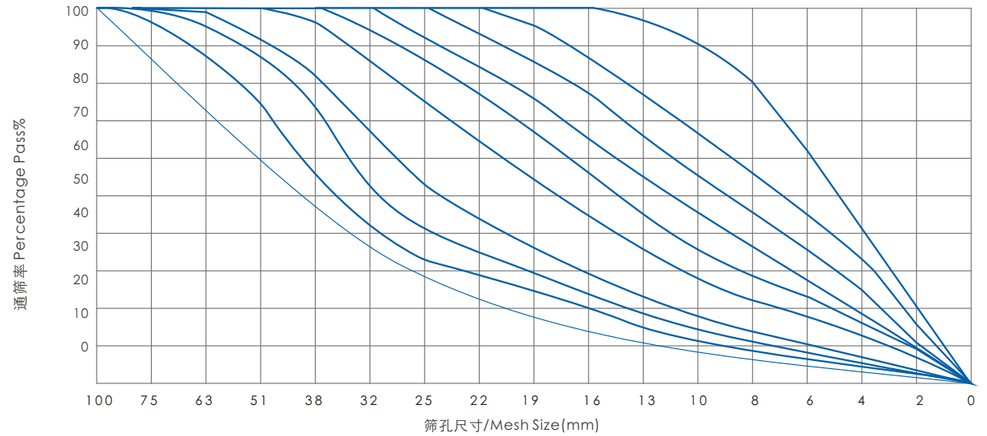

产品参数
Main Specification

型号 Model	最大给料尺寸 Max Feed Size(mm)	推荐排料口范围 Discharge Range (mm)	电机功率 Power Of Motor (kw)	生产能力(吨/小时) ——开路，闭边排料口(mm) CAPACITY (TANS/H)-Open Circuit,Closed Discharge(mm)								
				9	13	16	19	22	26	31	38	51
SC150C	165	22-31	90	30-41	50-66	75-86	90-102	100-123	110-132	130-158		
SC150M	135	13-26										
SC150F	55	9-19										
SC200C	180	22-31	160	55-62	70-93	100-140	130-170	175-220	175-220	195-230		
SC200M	140	13-31										
SC200F	60	9-22										
SC280C	250	26-51	200	58-72	72-98	130-150	170-210	230-260	230-260	270-298	299-322	325-350
SC280M	160	16-38										
SC280F	80	9-22										
SC400C	300	32-63	315	120-145	140-180	200-240	230-300	295-368	295-368	310-410	350-450	460-550
SC400M	170	22-51										
SC400F	80	13-26										
SC600C	350	31-51	450 - 550		300 - 420	350 - 530	390 - 510	430 - 590	460 - 620	490 - 680	570 - 760	650 - 860
SC600M	230	22-51										
SC600F	80	13-26										

注:1.表中生产能力为开路生产。生产能力与破碎物料的给料方式、物理性能、破碎比其他组成等有关。
2.最小排料口以支撑套跳动为限。破碎物料的特性影响排料口的大小。

Note: 1. The production capacity in the table is open circuit production. The production capacity and the feeding mode, physical properties and crushing of the crushed materials are related to other components.
2. The minimum discharge opening is limited to the support sleeve. The characteristics of the broken material affect the size of the discharge opening.

注：规格型号如有变动，恕不另行通知。
Note: Specifications and models are subject to change without notice.

PYF COMPOSITE HYDRAULIC CONE CRUSHER
PYF复合液压圆锥破碎机

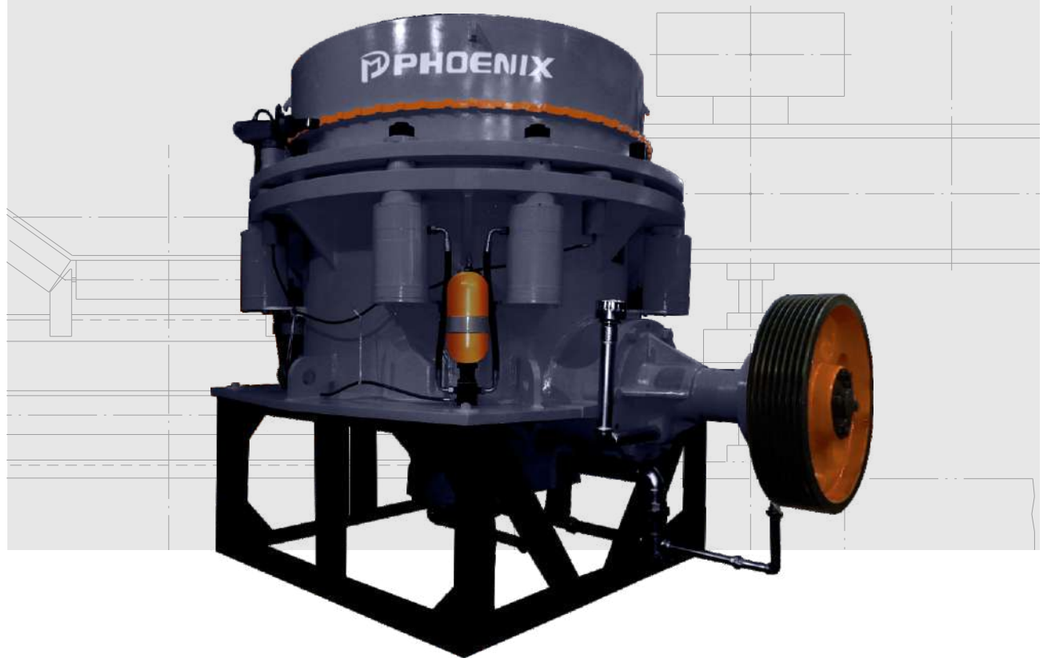

设备简介
Introduction

应用范围：用于制砂，还可广泛应用于金属矿山、水泥厂、建材行业等

物　　料：用于中、细碎抗压强度低于300Mpa硬度的各种矿石和岩石，如铁矿石、有色金属矿石、玄武岩、花岗岩、石灰岩、石英岩、沙岩、鹅卵石等;

产品简介：复合圆锥式破碎机，是圆锥破碎机中的拥有弹簧和液压缸的综合型圆锥破碎机，破碎力大、效率高、处理量高、运作成本低。力度均匀，使用寿命长。过载保护，有液压/弹簧保险系统，安全高效。腔型多，用户可根据不同的需要选择。

Applications: For sand making, it can also be widely used in metal mines, cement plants, building materials industries, etc.

Material: used for medium and fine crushing of various ores and rocks with compressive strength below 300Mpa, such as iron ore, non-ferrous metal ore, basalt, granite, limestone, quartzite, sandstone, pebbles, etc.;

Product introduction: The compound cone crusher is a comprehensive cone crusher with spring and hydraulic cylinder in the cone crusher. It has large crushing force, high efficiency, high processing capacity and low operating cost. Uniform force and long service life. Overload protection, hydraulic / spring safety system, safe and efficient.

产品参数
Main Specification

规格 Type	型号 Model	腔型 Chamber Type	破碎锥直径 Mantle Diameter (mm)	排料口调整范围 Adjusting Range of Discharge Opening (mm)	最大给料尺寸 Max Feed Size (mm)	处理能力 Capacity (t/h)	主电机功率 Main Motor Power (kw)	重量 Weight (kg)	外型尺寸 Overall dimensions (L×W×H)(mm)
Φ900	PYFB-0910	标准细型 Standard Fine Type	900	9-22	85	45-91	75	12367	2700×2275×2115
	PYFB-0917	标准粗型 Standard Coarse Type		13-38	150	59-163		12221	
	PYFB-0918	标准特粗型 Standard Super Coarse Type		25-38	150	118-163		12220	
	PYFD-0904	短头细型 Short Head Fine Type		3-13	35	27-90		13164	
	PYFD-0906	短头中型 Short Head Medium Type		3-16	51	27-100		13321	
	PYFD-0907	短头粗型 Short Head Coarse Type		6-19	65	59-129		13316	
Φ1300	PYFB-1313	标准细型 Standard Fine Type	1295	13-31	115	109-181	160	22476	2983×1866×3156
	PYFB-1321	标准中型 Standard Medium Type		16-38	178	132-253		22167	
	PYFB-1324	标准粗型 Standard Coarse Type		19-51	205	172-349		22120	
	PYFB-1325	标准特粗型 Standard Super Coarse Type		25-51	220	236-358		22125	
	PYFD-1306	短头细型 Short Head Fine Type		3-16	54	36-163		21703	
	PYFD-1308	短头中型 Short Head Medium Type		6-16	78	82-163		21675	
	PYFD-1310	短头粗型 Short Head Coarse Type		8-25	89	109-227		21789	
	PYFD-1313	短头特粗型 Short Head Super Coarse Type		16-25	113	209-236		21821	
Φ1600	PYFBII-1620	标准细型 Standard Fine Type	1676	16-38	178	181-327	250	41460	3900×2930×3242
	PYFBII-1624	标准中型 Standard Medium Type		22-51	205	258-417		41087	
	PYFBII-1626	标准粗型 Standard Coarse Type		25-64	228	299-635		40834	
	PYFBII-1636	标准特粗型 Standard Super Coarse Type		38-64	313	431-630		40674	
	PYFDII-1607	短头细型 Short Head Fine Type		5-13	60	90-209		40734	
	PYFDII-1608	短头中型 Short Head Medium Type		6-19	76	136-281		40614	
	PYFDII-1613	短头粗型 Short Head Coarse Type		10-25	113	190-336		40531	
	PYFDII-1614	短头特粗型 Short Head Super Coarse Type		13-25	129	253-336		40374	
Φ2100	PYFBII-2127	标准细型 Standard Fine Type	2134	19-38	236	544-1034	400		4613×3302×4638
	PYFBII-2133	标准中型 Standard Medium Type		25-51	284	862-1424			
	PYFBII-2136	标准粗型 Standard Coarse Type		31-64	314	1125-1814		86730	
	PYFBII-2146	标准特粗型 Standard Super Coarse Type		38-64	391	1252-1941			
	PYFDII-2110	短头细型 Short Head Fine Type		5-16	89	218-463			
	PYFDII-2113	短头中型 Short Head Medium Type		10-19	113	404-580			
	PYFDII-2117	短头粗型 Short Head Coarse Type		13-25	151	517-680		89500	
	PYFDII-2120	短头特粗型 Short Head Super Coarse Type		16-25	172	580-744			

注：规格型号如有变动，恕不另行通知。
Note: Specifications and models are subject to change without notice.

CF COUNTERATTACK SERIES
CF反击破系列

适用范围
Scope of application

本产品适用于矿山、水利、交通、铁路、水泥、建材、冶金、化工、电力、建筑等行业硬质材料的粗、中破碎，材料硬度不超过150MPa。具产量大，破碎效率高、能耗低、磨损小、可靠性高，产品成良好立方粒形等优点。

This product is suitable for coarse and medium crushing of hard materials in mining, water conservancy, transportation, railway, cement, building materials, metallurgy, chemical, electric power, construction and other industries. The hardness of the material does not exceed 150MPa. It has the advantages of large output, high crushing efficiency, low energy consumption, low wear and high reliability, and good cubic shape.

设备简介
Introduction

CF型反击式破碎机，是本公司根据新破碎机理论，汲取国际先进的同型设备内核，结合国内砂石行业具体工况条件，而自主研制的新一代反击式破碎机。它采用了新的制造技术，独特的结构设计，能加工出呈立方体、无张力和裂缝的产品，粒形相当好。能破碎粒度不超过950mm，抗压强度不超过150MPa的各种粗、中物料（花岗石、石灰石、混凝土等），广泛用于各种矿山、铁路、高速公路、能源、水泥、化工、建筑等行业，其出料粒度大、小可调，破碎风格多样化，能简化破碎流程，具有石砂粒形好，可靠性高，质优价廉等突出优越性。

The CF type impact crusher is a new generation of impact crusher independently developed by the company based on the new crusher theory, drawing on the international advanced homogenized equipment core and combining the specific working conditions of the domestic sand and gravel industry. It uses a new manufacturing technology, unique structural design, can produce cubes, tension-free and crack products, the shape is quite good. It can crush all kinds of coarse and medium materials (granite, limestone, concrete, etc.) with particle size not exceeding 950mm and compressive strength not exceeding 150MPa. It is widely used in various mines, railways, highways, energy, cement, chemical industry and construction. In other industries, the discharge granularity is large, small and adjustable, and the crushing style is diversified, which can simplify the crushing process, and has the advantages of high stone-grain shape, high reliability, high quality and low price.

产品参数
Main Specification

基本参数 Basic parameters	单位 Unit	设备型号 Type of equipment	
		CF250/CF250C	CF400/CF400C
进料口尺寸 Feed port size	mm	1360×972	1360×975
转子直径 Rotor diameter	mm	1200	1300
转子长度 Rotor length	mm	1300	1300
最大进料尺寸 Maximum feed size	mm	⩽750	⩽950
出料粒度 Discharge granularity	mm	⩽50/⩽120	⩽80/⩽120
生产能力 Production capacity	t/h	180~300	280~500
转子转速（最大） Rotor speed (Maximum)	r/min	700	700
电动机功率 Motor Power	kw	200	250
重量（不包括电动机） Weight (Excluding motor)	t	18	21
外形尺寸（长 x 宽 x 高） Dimensions (l x w x h)	mm	3515×2430×2828	3669×2430×2940

注：规格型号如有变动，恕不另行通知。
Note: Specifications and models are subject to change without notice.

PF COUNTERATTACK SERIES
Pf反击破系列

产品特点
Product Characteristics

1. 高效节能；
2. 转子运转稳定；
3. 高铬板锤、独特的反击衬板、寿命长；
4. 成品形状呈立方体，无张力裂缝，粒型较好，排料粒度大小可调，简化破碎流程维修方便，操作简单可靠。

1. High efficiency and energy saving;

2. The rotor is stable;

3. High chrome plate hammer, unique counter lining, long life;

4. The shape of the finished product is cubic, no tension crack, good grain shape, adjustable grain size, simplifying the crushing process, easy to operate, simple and reliable operation.

设备简介
Introduction

反击式破碎机一般作为二级破碎设备，该系列破碎机可处理粒度不大于500毫米，抗压强度不超过320Mpa的各种物料。具有破碎比大、破碎效率高、维修方便等特点。成品成立方体，是高速公路路面及水电建设所用骨料的理想加工设备。反击式破碎机以其优异的性能和良好的表现，被广泛应用于高速公路建设、水利工程和建筑用碎石加工等领域。

The impact crusher is generally used as a secondary crushing device. The crusher can process various materials with a particle size of not more than 500 mm and a compressive strength of not more than 320 Mpa. It has the characteristics of large crushing ratio, high crushing efficiency and convenient maintenance. The finished product is a cube, which is an ideal processing equipment for the highway pavement and the aggregate used in hydropower construction. With its excellent performance and good performance, the impact crusher is widely used in highway construction, water conservancy projects and gravel processing for construction.

产品参数
Main Specification

型号 Model	转子尺寸 Rotor Size(mm)	进料口尺寸 Feed Opening (mm×mm)	最大进料粒度 Max Feed Size(mm)	生产能力 Crushing Capacity(t/h)	功 率 Power(kw)	重 量 Weight(t)	外形尺寸 Overall Dimensions (mm)
PF-1007	Φ1000×700	400×730	300	25-45	30-55	9.5	2400×1558×2660
PF-1010	Φ1000×1050	400×1080	350	50-80	55-75	12.2	2400×2250×2620
PF-1210	Φ1250×1050	400×1080	350	80-120	110-132	14.2	2690×2338×2890
PF-1214	Φ1250×1400	400×1430	350	100-160	132-160	18.5	2690×2688×2890
PF-1310	Φ1300×1050	490×1170	400	80-140	110-160	13.5	2780×2478×2855
PF-1315	Φ1320×1500	860×1520	500	150-220	220	20.9	3350×2710×2670
PF-1415	Φ1450×1500	900×1650	500	200-260	260-280	27.1	3400×3500×3280
PF-1515	Φ1500×1500	980×1610	500	220-280	280-315	30.5	3950×3350×3055
PF-1320V	Φ1320×2000	2030×800	400	280-320	280	29.7	3280×3217×2613
PF-1420V	Φ1400×2000	2020×1000	600	300-350	355	35	3708×3350×3830
PF-1520V	Φ1520×2000	2030×890	500	450-600	200×2	36.4	3666×3232×3000
PF-1620V	Φ1640×2000	2020×860	520	400-550	220×2	41	3620×3640×2995

注：规格型号如有变动，恕不另行通知。
Note: Specifications and models are subject to change without notice.

HX/HB SAND MAKING MACHINE
HX/HB制砂整形机

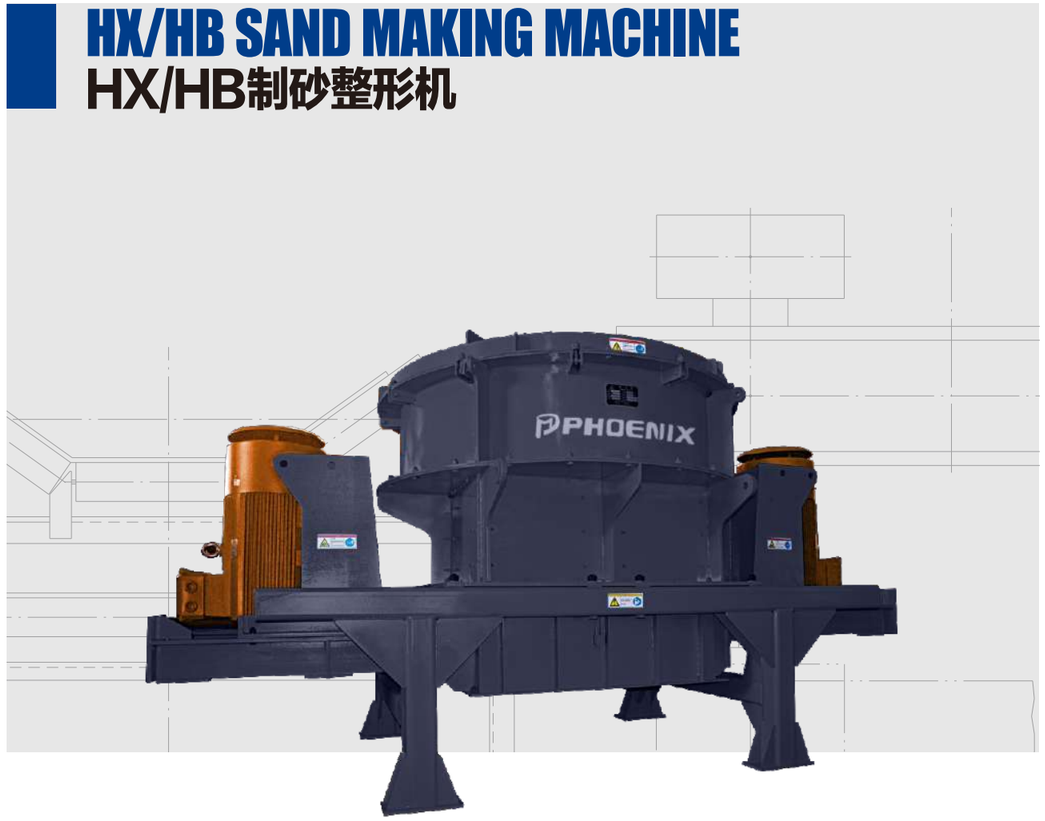

设备简介
Introduction

HX/HB系列制砂整形机是我公司技术人员研发的新型设备，适用于抗压强度在300MPa以下的各种矿石和岩石物料颗粒制砂、整形，可根据用户要求，选用不同转子转速和不同电机功率的组合，以满足用户不同的需要。可根据用户的要求，很方便地改成石打铁的制砂机，我公司的砂石整形机和制砂机绝大部分零部件可以互通互换。

HX/HB series sand making machine is a new type of equipment developed by our technicians. It is suitable for sand making and shaping of various ore and rock materials with compressive strength below 300MPa. Different rotor speeds and different according to user requirements. The combination of motor power to meet the different needs of users. According to the requirements of the users, it is very convenient to change into a sand making machine for stone and iron. Most of the parts of our company's sand and stone shaping machine and sand making machine can be interchanged.

产品特点
Features

◇ 优异的制砂整形性能；
Excellent sand making performance;

◇ 耐磨件数量少，维护成本低，使用寿命长；
Low wear parts, low maintenance costs and long service life;

◇ 可配液压开启装置，维护方便；
It can be equipped with hydraulic opening device for easy maintenance;

◇ 低噪音、低振动、粉尘少、符合环保要求。
Low noise, low vibration, less dust, and meet environmental requirements.

产品参数
Main Specification

HX 制砂机 Sand Maker :

型号 Model	最大 给料尺寸 Max Feed Size (mm)	转子的外径 OD of rotor (mm)	转子的圆周速度 Speed of rotor (m/s)	电机功率 Power of motor (kw)	处理能力 Capacity (t/h)	重量 Weight (kg)	外型尺寸 Overall Dimensions (mm)
HX-1000	40	1040	65	160*2	210	17800	5710*2880*3150
				160*2	210		
			65	160*2	210		
				160*2	210		
HX-1200	40	1235	65	185*2	280	18500	5710*2880*3150
				185*2	280		
			65	185*2	280		
				185*2	280		

HB 整形机 Sand Shapper :

型号 Model	最大 给料尺寸 Max Feed Size (mm)	转子的外径 OD of rotor (mm)	转子的圆周速度 Speed of rotor (m/s)	电机功率 Power of motor (kw)	处理能力 Capacity (t/h)	重量 Weight (kg)	外型尺寸 Overall Dimensions (mm)
HB-1000	40	1040	45	110*2	130-200	17500	5710*2880*3150
			45	110*2	130-200	17500	
HB-1200	40	1235	50	132*2	185-300	18300	5710*2880*3150
			50	132*2	185-300	18300	
			50	132*2	185-300	18300	

注：规格型号如有变动，恕不另行通知。
Note: Specifications and models are subject to change without notice.

HIGH EFFICIENCY CRUSHER
PX高效细碎机

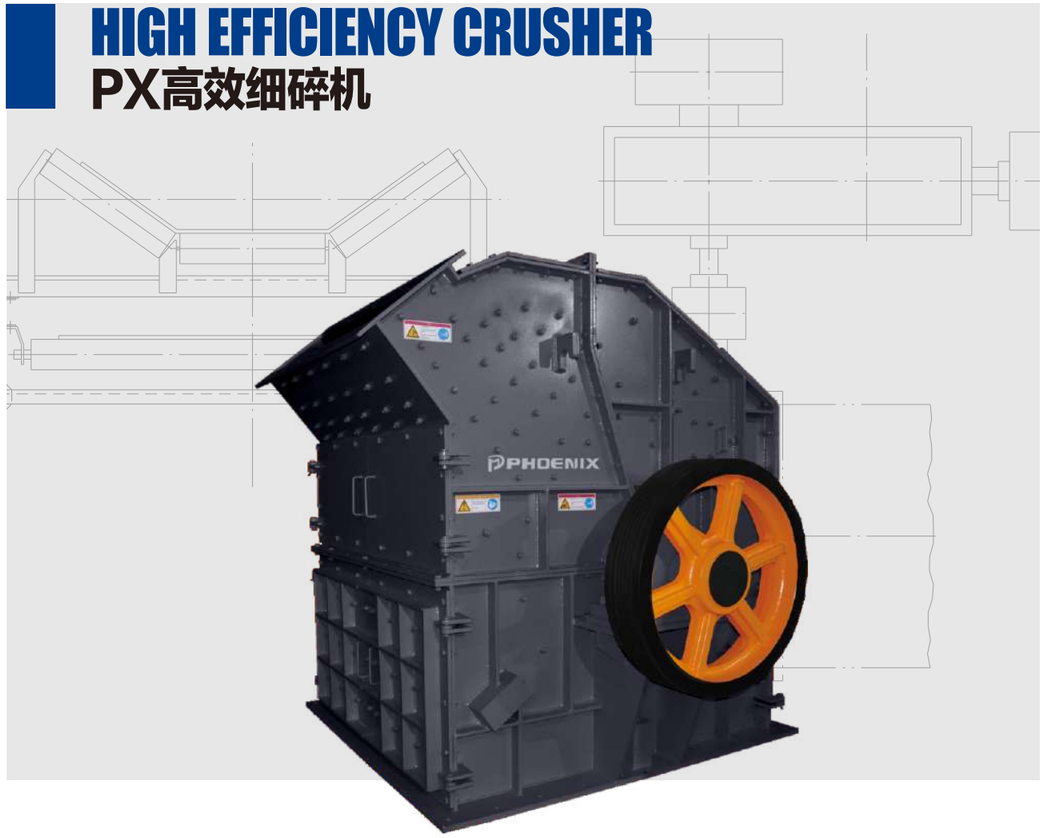

设备简介
Introduction

PX高效细碎机引进国外先进技术，经过优化设计和机构改进，而设计制造的新一代高效细碎机。该设备广泛用于化工、建材、冶金、采矿、选煤、制砂及耐火材料等行业，可对石灰石、水泥熟料、铁矿石、页岩、白云岩、花岗岩、石膏、混合材料等中硬度物料进行高效细碎。

PX high-efficiency fine crusher introduces foreign advanced technology, and is designed and manufactured by a new generation of high-efficiency fine crusher after optimization design and mechanism improvement. The equipment is widely used in chemical, building materials, metallurgy, mining, coal preparation, sand making and refractory industries, etc., and can be used in limestone, cement clinker, iron ore, shale, dolomite, granite, gypsum, mixed materials, etc. Hardness materials are efficiently crushed.

产品特点
Features

超高细碎：新增粒度调节装置，保证出料粒度≤3mm占85%；

高效节能：在同等产量下电机能耗降低40%；

超长寿命：超高合金组合式锤头，可掉头使用，平均寿命提高4倍；

破碎比大：可将熟料一、二级，石灰石二、三级破碎，合并为一级破碎；

维修简单：机器的上壳体可开启，使更换易损件更方便。

Ultra-high fine crushing: new particle size adjustment device to ensure that the discharge granularity ≤ 3mm accounts for 85%;

High efficiency and energy saving: the motor energy consumption is reduced by 40% under the same output;

Long life: Ultra-high alloy combined hammer head, can be used in U-turn, and the average life expectancy is increased by 4 times;

The crushing ratio is large: the first and second grades of clinker and the second and third grades of limestone can be crushed and combined into a first-stage crushing;

Simple maintenance: the upper casing of the machine can be opened, making it easier to replace consumables.

产品参数
Main Specification

型号 Model	最大进料粒度 Max Feeding Size (mm)	平均出料粒度 Average Discharge Granularity (mm)	处理能力 Capacity		功率 Motor Power (kw)	外形尺寸 Overall Dimension (mm)
			水泥熟料 Clinker(t/h)	石灰石 Limestone(t/h)		
PX-8040	80	3	15-20	20-25	37	1395*1506*1390
PX-8080	80	3	25-30	30-40	45	1395*1906*1390
PX-9080	100	3	40-45	45-50	55	1754*1906*1659
PX-9010	100	3	45-50	50-55	55/75	1754*2176*1659
PX-1010	150	3-5	50-60	60-70	90	2138*2590*2021
PX-1210	200	3-5	60-80	70-90	110	2524*2761*2325
PX-1212	200	3-5	60-100	70-110	132	2524*2866*2325
PX-1414	200	5-8	70-150	70-160	200	2550*3120*2670
PX-1616	200	5-8	100-210	110-260	250	2922*3564*2900
PX-1818	200	5-10	120-270	130-310	315	3121*3754*3150

注：规格型号如有变动，恕不另行通知。
Note: Specifications and models are subject to change without notice.

REVERSIBLE BALLLESS HAMMER CRUSHER
PCKW可逆式无篦条锤式破碎机

产品特点
Product Characteristics

超高细碎：转子直径大，锤头锤柄长，细料比例高，≤5mm占80%;
高效节能：锤头使用寿命长，停机时间少；
维修简单：机器上可带液压开启装置，易损件更换更方便；
适用范围：适合中硬度低品位铁矿石、石灰石、煤矸石、石英石等物料。

Super high and fine crush: the diameter of the rotor is large, the hammer handle is long, and the proportion of fine material is ≤5mm, accounting for 80%;
High efficiency and energy saving: the hammer has a long service life and less downtime;
Simple maintenance: hydraulic opening device can be installed on the machine, and the replacement of wearing parts is more convenient;
Scope of application: Suitable for medium hardness and low grade iron ore, limestone, coal gangue, quartz stone and other materials.

设备简介
Introduction

可逆式无篦条锤式破碎机是锤式破碎机系列中的一种新型产品。因其没有篦条和是可逆的而命名其为无篦条可逆锤式破碎机。它克服了物料湿度大导致堵塞的问题，也提高了锤头的利用率，降低了更换锤头的频率，保证了出料粒度的均匀性。

它主要用于破碎最大粒度为200毫米的物料。该锤式破碎机可用于破碎生产线，制砂生产线，工作锤头有较高的耐磨性能，锤头一边磨损之后可以换边使用，大大提高了锤头的使用寿命。本系列产品是冶金、建材、化工和水电等工业部门中细碎中等硬度以下脆性物料的主要设备之一，如炼焦用煤、小块石灰石、石膏、明矾、砖、瓦等等，被破碎物料的抗压强度不得大于150Mpa，表面水分不大于15%。

The reversible ballless hammer crusher is a new product in the hammer crusher series. It is named as a reversible hammer crusher without a purlin and is reversible. The utility model overcomes the problem that the material humidity is large and causes blockage, and also improves the utilization rate of the hammer head, reduces the frequency of replacing the hammer head, and ensures the uniformity of the discharge particle size.
It is mainly used to crush materials with a maximum particle size of 200 mm. The hammer crusher can be used for the crushing production line and the sand making production line. The working hammer has high wear resistance, and the hammer head can be used after changing the side, which greatly improves the service life of the hammer. This series of products is one of the main equipments for crushing brittle materials with medium hardness below the metallurgy, building materials, chemical and hydropower industries, such as coking coal, small limestone, gypsum, alum, brick, tile, etc. The compressive strength shall not exceed 150Mpa and the surface moisture shall not exceed 15%.

产品参数
Main Specification

型号 Type	PCKW1010	PCKW1214	PCKW1416	PCKW1618
直径*长度 Diameter* length(mm)	1000*1200	1200*1400	1400*1600	1600*1800
转子速度 Rotor speed(r/min)	987	870	740	675
进料口尺寸 Feed port size(mm)	300*1200	400*1400	400*1600	550*1800
最大给料尺寸 Maximum feed size(mm)	100	100	150	200
出料粒度 Discharge granularity(mm)	0-10	0-10	0-10	0-10
处理能力 Processing capacity(t/h)	50-80	60-120	100-200	180-280
电机功率 Motor Power(kw)	132-160	160-220	280-315	315-500
机器重量 Machine weight(kg)	9000	15000	28000	38000
外形尺寸 Dimensions(mm)	3200*2400*1700	3500*2700*2050	3900*2900*2200	4200*3100*2400

注：规格型号如有变动，恕不另行通知。
Note: Specifications and models are subject to change without notice.

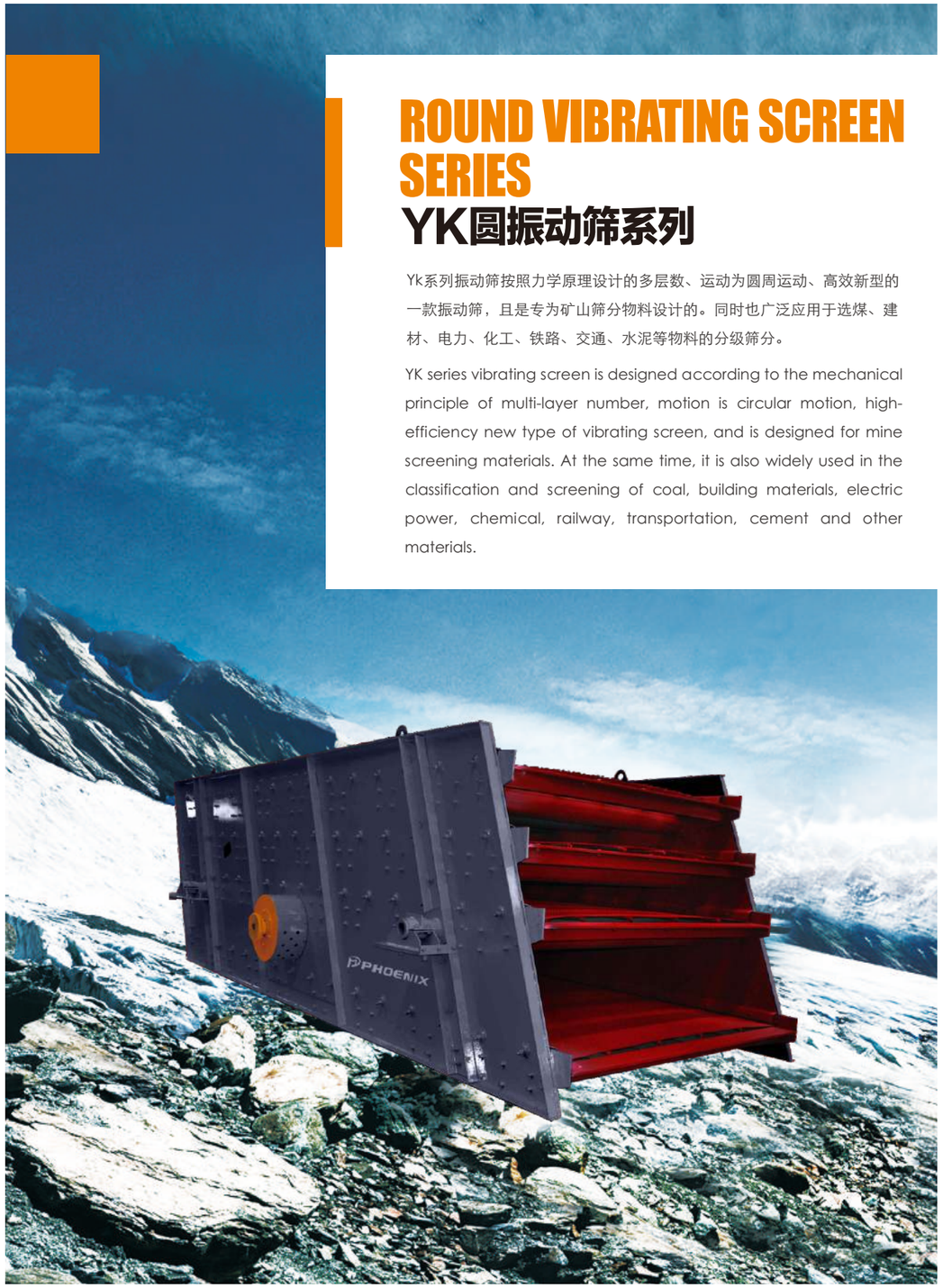

ROUND VIBRATING SCREEN SERIES
YK圆振动筛系列

Yk系列振动筛按照力学原理设计的多层数、运动为圆周运动、高效新型的一款振动筛，且是专为矿山筛分物料设计的。同时也广泛应用于选煤、建材、电力、化工、铁路、交通、水泥等物料的分级筛分。

YK series vibrating screen is designed according to the mechanical principle of multi-layer number, motion is circular motion, high-efficiency new type of vibrating screen, and is designed for mine screening materials. At the same time, it is also widely used in the classification and screening of coal, building materials, electric power, chemical, railway, transportation, cement and other materials.

产品特点
Product Characteristics

◇激振力强，产量高；
Strong excitation force and high output;

◇筛分效率高，振动噪音小；
High screening efficiency and low vibration noise;

◇机身结构新颖，坚固耐用，便于维修。
The fuselage structure is novel, durable and easy to repair.

产品参数
Main Specification

型号 Model	层数 Number of layers	筛面规格 Screen surface specifications（mm）	最大进料尺寸 Maximum feed size（mm）	处理能力 Processing power（t/h）	振动频率 Vibration frequency(HZ)	电机功率 Motor Power (kw)	重量 Weight (kg)	外形尺寸 Dimensions（mm）
F2YK-1230	2	1200*3000	100	7.5-80	16.2	5.5	2340	3900*1900*1000
F3YK-1230	3	1200*3000	100	7.5-80	16.2	7.5	3050	3900*1900*1500
F3YK-1548	3	1500*4800	200	30-200	13-16	15	6866	5906*2100*1900
F4YK-1548	4	1500*4800	200	30-250	13-16	18.5	7360	5906*2100*2150
F2YK-1854	2	1800*5400	250	50-300	16.2	18.5	6769	6509*2536*1810
F3YK-1854	3	1800*5400	250	50-300	16.2	22	8285	6509*2536*1910
F4YK-1854	4	1800*5400	250	50-300	16.2	30	9796	6509*2536*2250
F2YK-2160	2	2100*6000	250	100-400	16.2	30	9680	7150*2670*2120
F3YK-2160	3	2100*6000	250	100-400	16.2	30	10206	7150*2670*2270
F4YK-2160	4	2100*6000	250	100-400	16.2	37	11800	7150*2670*2650
F2YK-2460	2	2400*6000	300	150-600	16.2	30	80130	7150*2900*2120
F3YK-2460	3	2400*6000	300	150-600	16.2	30	12350	7150*2900*2350
F4YK-2460	4	2400*6000	300	150-600	16.2	37	13850	7150*2900*2680
F2YK-2475	2	2400*7500	300	200-650	16.2	22*2	12285	8491*3156*1613
F3YK-2475	3	2400*7500	300	200-650	16.2	22*2	14250	8491*3156*2163
F4YK-2475	4	2400*7500	300	200-650	16.2	22*2	15320	8491*3156*2713
F2YK-3072	2	3000*7200	350	200-800	16.2	22*2	14360	7991*3716*1613
F3YK-3072	3	3000*7200	350	200-800	16.2	30*2	15660	7991*3716*2163
F4YK-3072	4	3000*7200	350	200-800	16.2	30*2	16750	7991*3716*2713
F2YK-3680	2	3600*8000	350	300-1000	16.2	37*2	21560	8491*4556*1613
F3YK-3680	3	3600*8000	350	300-1000	16.2	37*2	23220	8491*4556*2163
F4YK-3680	4	3600*8000	350	300-1000	16.2	37*2	25630	8491*4556*2163

注：规格型号如有变动，恕不另行通知。
Note: Specifications and models are subject to change without notice.

R TYPE PENDULUM MILL
R型摆式磨粉机

设备简介
Introduction

R型摆式磨粉机适用于粉磨各类莫式硬度不大于9.3级，湿度在6%以下的非塑性矿石、矿土、金属氧化物、化工合成物等非易燃易爆物料。为改善和提高摆式磨粉机的性能，提高成品的细度，减少磨粉时渗入的含铁量，降低劳动强度，改善环保条件，我们可提供与摆式磨粉机配套产品。

R-type pendulum mill is suitable for grinding non-inflammable and explosive materials such as non-plastic ore, ore, metal oxides and chemical compounds with a hardness of not more than 9 and a humidity below 6%. In order to improve and improve the performance of the pendulum mill, improve the fineness of the finished product, reduce the amount of iron infiltrated during milling, reduce labor intensity, and improve environmental conditions, we can provide products matching with pendulum mills.

全套设备示意图
Full Set of Equipment Schematics

1.颚式破碎机
2.斗式提升机
3.电磁震动给料机
4.主机
5.传动装置
6.分析机
7.普通装置
8.鼓风机

1.Jaw crusher
2. Bucket elevator
3. Electromagnetic vibration feeder
4. Host
5. Transmission
6. Analysis machine
7. Ordinary device
8. Blower

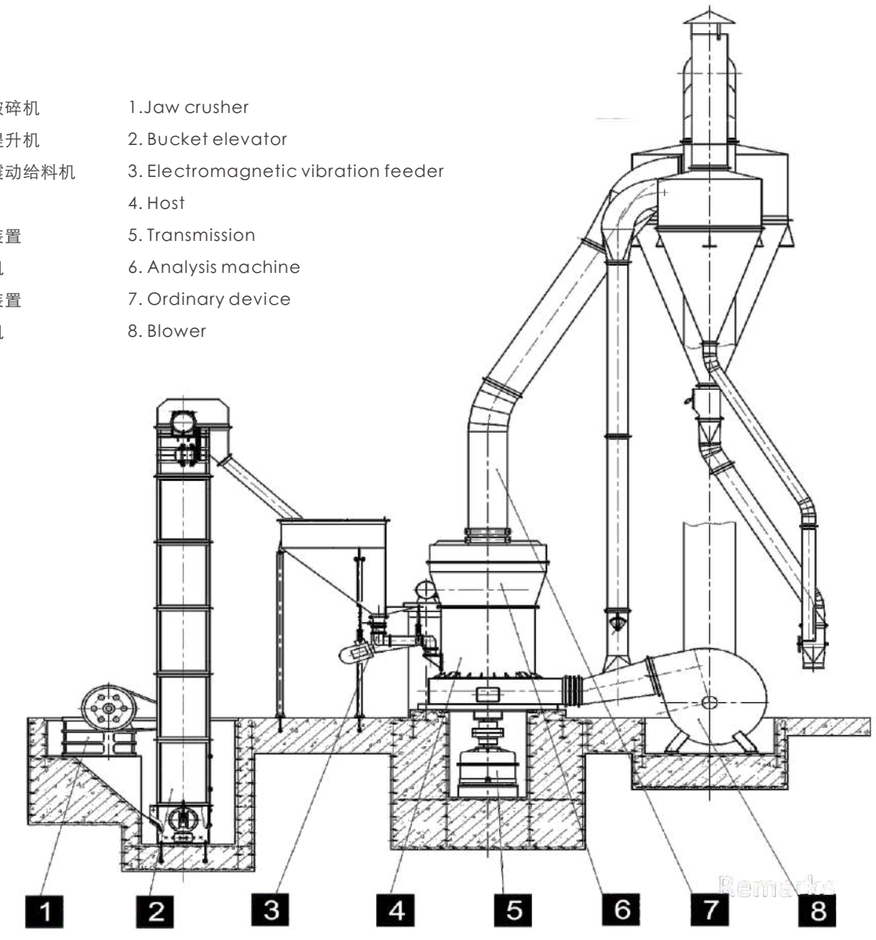

摆式磨粉机外形尺寸 Shape Dimensions of Pendulum Grinder

产品型号 Model	长（毫米）L (mm)	宽（毫米）W (mm)	高（毫米）H (mm)
4R 3216	9900	5800	10580
5R 4119	10500	6500	13530
6R 4528	17800	9700	10500

注：规格型号如有变动，恕不另行通知。
Note: Specifications and models are subject to change without notice.

摆式磨粉机产品特点
Pendulum Mill Product Features

1. 占地面积小，成套性强，从块料粉碎到成品包装，能独立自成生产体系。
2. 研磨的成品粒度通筛率可达到97.5%以上。
3. 振动给料机给料均匀，易于调节，体积小，重量轻，低能耗，维护方便。
4. 主机传动装置采用密闭减速机，传动平稳，安全可靠，不渗漏。
5. 主机铲刀架在运转时始终处于与物料接触，下座磨损后拆卸连接螺栓可以调换。
6. 采用人性化设计，性能稳定，操作方便。
7. 可调节成品粒度，磨粉物料应用广泛。
8. 分析机转速采用变频控制，转速更加精确，细料分选效果更佳。
9. 可选配相应配置的专用脉冲布袋除尘器，粉尘排放浓度达到国家环保要求。

1. It has a small footprint and a complete set of components. It can be self-contained in the production system from the crushing of blocks to the packaging of finished products.

2. The finished sieve size of the finished product can reach more than 97.5%.

3. Vibrating feeder is uniform in feeding, easy to adjust, small in size, light in weight, low in energy consumption and easy to maintain.

4. The main drive unit adopts a closed reducer, which is stable, safe and reliable, and does not leak.

5. The main blade holder is always in contact with the material during operation, and the connecting bolt can be exchanged after the lower seat is worn.

6. Adopt humanized design, stable performance and convenient operation.

7. The finished product particle size can be adjusted, and the grinding material is widely used.

8. The speed of the analysis machine is controlled by frequency conversion, the rotation speed is more accurate, and the fine material sorting effect is better.

9. Optional special pulse bag filter, the dust emission concentration meets the national environmental protection requirements.

产品参数
Main Specification

摆式磨粉机技术参数 Technical Parameters of Pendulum Mill

产品型号 Product Model	磨辊 Grinding Roll			磨环 Grindingring		最大进料粒度(mm) Maximum feed granularity		成品粒度 Granularity of Finished Product (mm)	主机功率 Host Power (kw)
	个数 Number	直径(mm) Diameter	高度(mm) Height	内径(mm) Inside Diameter	高度(mm) Height	破碎机 Crusher	磨粉机 Grinder		
4R 3216	4	320	160	970	160	210	20	0.044-0.125	≤37
5R 4119	5	410	190	1270	190				≤75
6R 4528	6	450	280	1600	280	350	35		≤132

摆式磨粉机配套功率表 Pendle Mill Supporting Power Meter

产品型号 Model	主机 Host	鼓风机 Blower	颚式破碎机 Jaw Crusher	分析机 Analyzer	斗式提升机 Bucket Hoist	电磁振动给料机 Electromagnetic Vibration Feeder
4R 3216	37	37	15	5.5	3	0.06
5R 4119	75	75		7.5		0.2
6R 4528	132	132	22	11	7.5	0.25

摆式磨粉机标准产量 Standard Yield of Pendulum Grinder

产品型号 Type	莫式硬度（级） Mo hardness(class)				
	≥2-3	>3-4	>4-5	>5-6	>6-7
	产量（吨/时） Production(tons per hour)				
4R 3216	2.6-4.5	2-3.5	1.6-3	1.2-2.5	1-2
5R 4119	5-8	4-6	3.2-5	2.5-4.5	2-3.5
6R 4528	19-25	14.5-19	11-14.5	8-11	6-8

摆式磨粉机部件性能 Performance of part of pendulum mill

产品型号 Type	主机转速 Host speed (r.m.p)	分析机 Analyzer (r.m.p)	斗提升量 Number of lifts (m^3/h)	鼓风机 Blower	
				风量(m/h) Wind volume	风压(pa) Wind pressure
4R 3216	130	30-300	16	19000	2700
5R 4119	103			43000	
6R 4528	82		28	58000	6860

注：规格型号如有变动，恕不另行通知。
Note: Specifications and models are subject to change without notice.

产品简介
Product Description

移动式破碎站，适用于矿山或城市建筑垃圾资源再生处置，可按客户对成品料的特殊要求配置。由圆锥破碎机、立轴式冲击破碎机组合成的破碎、制砂移动破碎站。工艺配置先进、操作便捷、维修方便，为您节省了约90天的筹建期，省去了基础、设备钢架、皮带机、电气等安装、调试等大笔费用。

组合灵活，适应性强

可根据不同的破碎工艺要求组成“先碎后筛”，也可以组成“先筛后碎”流程，破碎站可按实际要求组成粗碎、细碎两段破碎筛分系统，也可组合成粗碎、中碎、细碎三段破碎筛分系统，还可以独立运行，有很大的灵活性。

性能可靠，维修方便

恒源公司破碎筛分系列产品如颚式破碎机、反击式破碎机、立式冲击破碎机、圆锥破碎机、各种振动筛等以性能优良、可靠性能高而著称。移动式破碎站主要设备都是采用这些产品，这些产品经过优化及强化设计，强度更高、性能更优、结构更紧凑。

The mobile crushing station is suitable for the recycling of mine or urban construction waste resources, and can be configured according to the special requirements of customers for finished materials. A crushing and sand-making mobile crushing station synthesized by a cone crusher and a vertical shaft impact crusher. Advanced process configuration, convenient operation and convenient maintenance, saving you about 90 days of preparation period, eliminating the need for large costs such as foundation, equipment steel frame, belt conveyor, electrical installation and commissioning.

Flexible combination and adaptability

According to different crushing process requirements, it can be composed of “first crushing and then crushing”, or it can be composed of “first screening and crushing” process. The crushing station can be composed of coarse crushing and fine crushing two-stage crushing screening system according to actual requirements, or can be combined into coarse crushing. The medium-crushing and fine-crushing three-stage crushing and screening system can also operate independently and has great flexibility.

Reliable performance and easy maintenance

Hengyuan crushing and screening products such as jaw crusher, impact crusher, vertical impact crusher, cone crusher, various vibrating screens, etc. are famous for their excellent performance and high reliability. These products are used in the main equipment of mobile crushing plants. These products are optimized and enhanced to provide higher strength, better performance and more compact structure.

移动颚式破碎站 Mobile Jaw Crushing Station

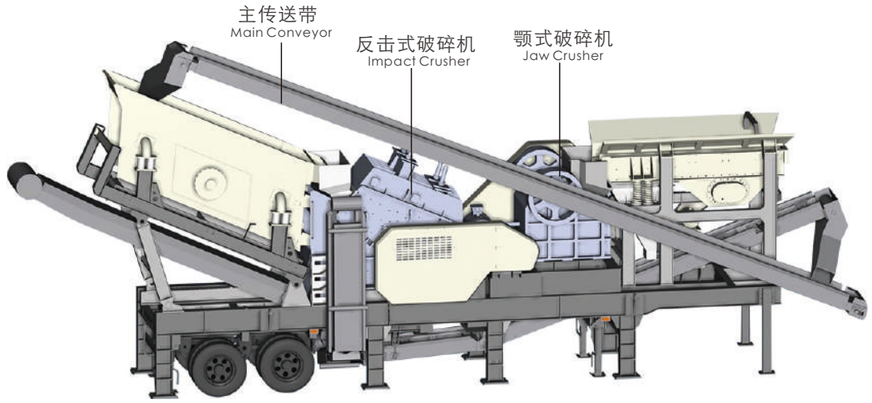

移动反击式破碎站 Mobile Counterattack Crushing Station

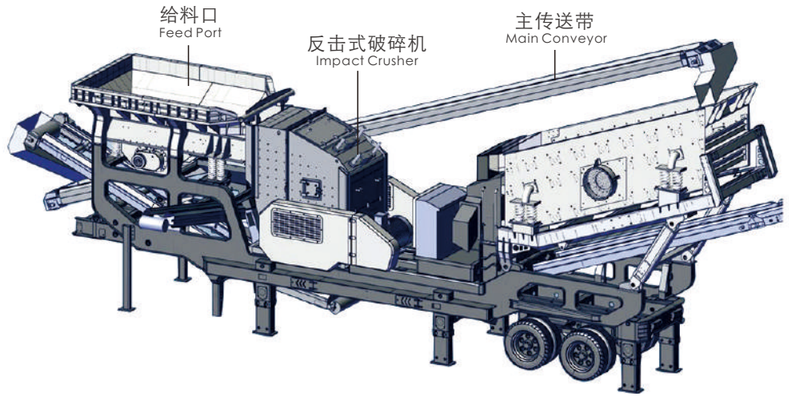

移动圆锥式破碎站 Moving Cone Crushing Station

产品参数
Main Specification

移动颚式破碎站 Mobile Jaw Crushing Station

规格 Specifications	给料机型号 Type of feed machine	鄂破型号 Jaw crusher model	皮带机规格 Belt machine specification	轮胎配置 Tire configuration	加长皮带机 Stretching belt machine	发电机 Generator	处理量 Processing volume (t/h)	功率 Power (KW)	外形尺寸 Shape Size (mm)	重量 Weight (t)
YPE69	GZD960×3800	PE600×900B	650×7M	并装双轴	选配		70-150	91.5	13200×2900×4700	42
YPE75	GZD1100×4200	PE750×1060B	800×9M	并装三轴	选配		90-120	134	15000×3100×5100	55
YPE912	GZD1300×4900	PE900×1200B	1000×11M	并装四轴	选配		150-300	146	17000×3300×5600	72

移动反击式破碎站 Mobile Counterattack Crushing Station

规格 Specifications	振动筛型号 Vibration Screen Model	反击破型号 Counterattack Broken Model	皮带机规格 Belt Machine Specification	轮胎配置 Tire Configuration	发电机 Generator	处理量 Processing volume (t/h)	功率 Power (KW)	外形尺寸 Shape Size (mm)	重量 weight (t)
3YPF1548	3YZS1548	PF1010	B500×7M	并装双轴	选配	50-250	70-90	12500×2800×6000	42
3YPF1848	3YZS1848	PF1210	B650×7M	并装双轴	选配	70-300	128.5-150.5	12500×3000×6500	46
3YPF1860	3YZS1860	PF1214	B650×8M	并装三轴	选配	90-400	154-190	13500×3000×6500	51
3YPF2160	3YZS2160	PF1315	B800×8M	并装三轴	选配	120-450	210-297	14000×3200×6500	57

移动圆锥式破碎站 Moving Cone Crushing Station

规格 Specifications	振动筛型号 Vibration Screen Model	圆锥破型号 Cone broken model	皮带机规格 Belt Machine Specification	轮胎配置 Tire Configuration	发电机 Generator	处理量 Processing volume (t/h)	功率 Power (KW)	外形尺寸 Shape Size (mm)	重量 weight (t)
3YPY900	3YZS1548	PYB900	B500×7M	并装双轴	选配	50-200	75	13000×2800×6400	43
3YPY1300	3YZS1848	ZYS36	B650×7M	并装双轴	选配	70-300	99-134	13000×3000×6700	47
3YPY1860	3YZS1860	ZYS51	B650×8M	并装三轴	选配	120-400	212.5-220.5	14000×3000×6700	53
3YPY2100	3YZS2160	HP220	B800×8M	并装三轴	选配	140-450	257.5-264.5	14000×3200×6700	58

注：规格型号如有变动，恕不另行通知。
Note: Specifications and models are subject to change without notice.

XL SPIRAL SAND WASHING MACHINE
XL螺旋式洗砂机

设备简介
Introduction

XL洗砂机机器转子采用中心结构，螺旋叶片安装在中心轴上，由减速器连接到中心轴上进行工作。借助固体颗粒的比重不同，因而在液体中沉降的速度不同的原理，进行机械分级的一种设备。用于建筑工地、砂石厂、预制厂及水电工地。大量用于砂石的脱泥、筛选作业，也可用于矿石选择作业。

The XL sand washer machine rotor adopts a central structure, and the spiral blade is mounted on the central shaft, and is connected to the central shaft by the reducer for work. An apparatus for mechanical classification by virtue of the fact that the specific gravity of the solid particles is different and thus the rate of sedimentation in the liquid is different. Used in construction sites, sand and gravel plants, prefabricated plants and hydroelectric fields. A large amount of desilting and screening operations for sand and gravel can also be used for ore selection operations.

工作原理
Working Principle

工作时，电机通过三角带、减速机、齿轮减速后带动叶轮缓慢转动，砂石由给料槽进入洗槽中，在叶轮的带动下翻滚并互相研磨，除去覆盖砂石表面的杂质，同时破坏包覆砂粒的水汽层，以利于脱水；同时加水，形成强大水流，及时将杂质及比重小的异物带走，并从溢出口洗槽排出，完成清洗作用。干净的砂石由叶片带走，最后砂石从旋转的叶轮倒入出料槽，完成砂石的清洗作用。

During operation, the motor rotates slowly through the V-belt, reducer and gear, and the impeller rotates slowly. The sand enters the washing tank from the feeding trough, rolls under the impeller, and grinds each other to remove impurities covering the surface of the gravel. Destroy the water vapor layer of the coated sand to facilitate dehydration; at the same time add water to form a strong water flow, take away the foreign matter with small impurities and small specific gravity in time, and discharge it from the overflow port to complete the cleaning. The clean sand is taken away by the blades, and finally the sand is poured from the rotating impeller into the discharge chute to complete the cleaning of the sand.

产品参数
Main Specification

型号 Type	XL915	2XL915	XL1115	2XL1115
螺旋体直径（mm） Spiral diameter	915	915	1115	1115
水槽长度（mm） Length of sink	7585	7585	9782	9782
给料尺寸（mm） Feed size	⩽ 10	⩽ 10	⩽ 10	⩽ 10
处理能力（t/h） Processing capacity	100	200	175	350
转速（r/min） Speed	21	21	17	17
电机功率（kw） Motor power	11	2*11	15	2*15
耗水量（t/h） Water consumption	10-80	20-160	20-150	40-300
外形尺寸（mm） Shape size	8500*2810*3600	8420*3760*396	1078*3980*4170	10970*5250*4720
重量（t） Weight	6.27	11.11	10.18	17.94

注：规格型号如有变动，恕不另行通知。
Note: Specifications and models are subject to change without notice.

XS WHEEL SAND WASHER
XS轮式洗砂机

设备简介
Introduction

XS洗砂机在制砂工艺中，用于洗净砂子中的泥土、粉尘等，达到洁净砂子的目的，亦可用于选矿等作业中的提砂或类似的工艺过程中。具有洗净度高，结构合理，产量大，洗砂过程中砂子流失少等特点，在生产过程中，传动部分与水、砂隔离，故障率大大低于螺旋洗砂机，是国内洗砂行业升级换代的最佳选择。

In the sand making process, the XS sand washing machine is used for washing the dirt and dust in the sand to achieve the purpose of cleaning the sand, and can also be used for sanding in the operation of beneficiation or the like or a similar process. It has the characteristics of high washing degree, reasonable structure, large output and less sand loss during sand washing. In the production process, the transmission part is separated from water and sand, and the failure rate is much lower than that of the spiral sand washing machine. It is the domestic sand washing industry. The best choice for upgrading.

产品特点
Features

1. 轮斗式洗砂机结构简单，叶轮传动轴承装置与水和受水物料隔离，避免了轴承因浸水、砂和污染物导致损坏的现象发生。

2. 洗砂机（洗沙机）用于砂石场洗砂时与传统的螺旋洗砂机比拟有显著优势：

a.细砂和石粉流失极少，所洗建筑砂级配和细度模数达到国家《建筑用砂》《建筑用卵石、碎石》尺度。

b.轮斗式洗砂机除筛网外几乎无易损件。

c.用寿命长，长期不用维修。

3. 洗砂机结构简单、维修便利、处理量大、功率消耗小、洗净度高。新奇的密封结构、全封锁油浴式传动装置、可调式溢流堰板，确保了该系列产品高效、耐用、清洗、脱水效果好，细粒产品保持不乱等特点。

1. The bucket type sand washer has a simple structure, and the impeller drive bearing device is isolated from the water and the water-receiving material, thereby avoiding the occurrence of bearing damage caused by water immersion, sand and pollutants.

2. Sand washing machine (sand washing machine) has obvious advantages compared with the traditional spiral sand washing machine when it is used for sand washing in sand gravel field:

a. The loss of fine sand and stone powder is very small, and the sand grading and fineness modulus of the washed building reaches the national "construction sand" and "pebble and gravel for construction" scale.

b. The wheel-type sand washing machine has almost no wearing parts except the screen.

c. Long service life and no maintenance for a long time.

3. The sand washing machine has the advantages of simple structure, convenient maintenance, large processing capacity, small power consumption and high washing degree. The novel sealing structure, fully-sealed oil bath transmission and adjustable overflow slab ensure the high efficiency, durability, cleaning and dewatering effect of the series, and the fine-grained products remain uncluttered.

产品参数
Main Specification

型号 Type	筒体直径 Cylinder diameter	给料尺寸 Feed size	处理能力 Processing capacity	电机功率 Motor power	外形尺寸 Shape size
	mm	mm	t/h	kw	mm*mm*mm
XS2615	2600×1500	≤10	30-80	7.5	3320×2200×2670
XS3016	3000×1600	≤10	80—160	18.5	4500×3206×3480
XS3500	3500×1000	≤10	120—600	11	4420×2930×3800

注：规格型号如有变动，恕不另行通知。
Note: Specifications and models are subject to change without notice.

DEWATERING SCREEN
FINE SAND RECYCLING MACHINE
TSS脱水筛/细砂回收机

设备简介
Introduction

脱水振动筛采用双电机自同步技术，通用型偏心块、可调振幅振动器。主要由筛箱、激振器、支承系统及电机组成。通过胶带联轴分别驱动两个互不联系的振动器作同步反向运转，两组偏心质量产生的离心力沿振动方向的分力叠加，反向离心抵消，从而形成单一的沿振动方向的激振力，使筛箱作往复直线运动。

The dewatering vibrating screen adopts dual motor self-synchronization technology, universal eccentric block and adjustable amplitude vibrator. Mainly composed of screen box, vibration exciter, support system and motor. Two unconnected vibrators are driven by the tape coupling shaft to perform synchronous reverse operation. The centrifugal forces generated by the two sets of eccentric mass are superimposed along the component of the vibration direction, and reverse centrifugally canceled, thereby forming a single excitation along the vibration direction. Force to make the screen box reciprocating linear motion.

产品特点
Features

1. 采用防水适频专用电机，双电机驱动自同步技术，实现快速脱水效果。
2. 投入小，流程简单，占地小等特点，便于系统工艺布置。
3. 连续干排作业，适合多种脱水需求，24小时连续干排作业。
4. 处理能力大，V型筛面设计，-5°过筛面爬坡脱水，干排尾矿含水低、效率高。
5. 高耐磨筛板使用寿命长，模块化组装设计，更换方便，节约成本，筛孔尺寸可选择。
6. 结构强度高，耐用。无内应力、强度高、质轻耐用的机架主体。

1. It adopts waterproof and frequency-specific motor and double motor drive self-synchronization technology to achieve fast dewatering effect.
2. The investment is small, the process is simple, and the land occupation is small, which is convenient for system process layout.
3. Continuous dry row operation, suitable for a variety of dehydration needs, 24 hours continuous dry row operation.
4. Large processing capacity, V-shaped screen surface design, -5° screened slope dewatering, dry tailings with low water content and high efficiency.
5. High wear-resistant sieve plate has long service life, modular assembly design, convenient replacement, cost saving, and mesh size.
6. High structural strength and durability. Frame body without internal stress, high strength, light weight and durability.

产品参数
Main Specification

型号 Type	筛面斜角 (°) Sieve angle	常用筛孔尺寸 (mm) Common mesh size	入料量 (t/h) Feed amount	动力源耗能 (kw) Power source energy consumption	激振器型号 Exciter model	参考重量 (t) Total weight
TSS1036	-5～-3	0.3～0.6	10～35	2×1.1	2×YZO-20-4	3.8
TSS1236	-5～-3		18～65	2×2.4	2×YZO-30-4	4.5
TSS1536	-5～-3		30～90	2×3.1	2×YZO-40-6	5.7
TSS1838	-5～-3		40～120	2×5.5	4×39-6	6.6
TSS2138	-3～0		60～150	2×7.5	4×45-6	8.2
TSS2538	-3～0		80～200	2×11	4×64-6	11

注：规格型号如有变动，恕不另行通知。
Note: Specifications and models are subject to change without notice.

HYQM/DMC PULSE DUST COLLECTOR
HYQM/DMC脉冲除尘器

上海恒源生产的脉冲除尘器是在HYCM型的基础上，改进的新型高效脉冲除尘器。具有净化效率高，处理气体能力大，性能稳定，滤袋寿命长,操作方便，维修工作量小等优点。

The pulse dust collector produced by Shanghai Hengyuan is a new high-efficiency pulse dust collector based on the HYCM type. The utility model has the advantages of high purification efficiency, large gas processing capacity, stable performance, long life of the filter bag, convenient operation and small maintenance workload.

产品参数
Main Specification

技术参数 Technical Parameters / 规格型号 Type		HYQM 96-4	HYQM 96-5	HYQM 96-6	HYQM 96-7	HYQM 96-8	DMC 48	DMC 64	DMC 96	DMC 112
处理风量(m^3/h) Treatment of wind volume(M3 / H)		26800	33400	40100	46800	53510	2600-3800	2900-4300	5200-7000	6000-9000
总过滤面积(m^3) Total filtration area(M3)		372	465	557	650	744	36	48	72	84
收尘室数（个） Number of collection rooms(units)		4	5	6	7	8				
每室袋数（条） Number of bags per room(bar)		96								
滤袋总数（条） Total number of filter bags(bars)		384	480	576	672	768	48	64	96	112
脉冲阀（带电磁阀） Pulse Valve (with solenoid valve)	数量（个） Number(s)	4	5	6	7	8	6	8	12	14
	规格（英寸） Specification(in.)	3					2½			
滤袋规格(DXLmm) Filter bag specification(DXLmm)		130*2450					120*2000			
滤袋材质 Filter bag material		根据烟气性质选用 Selection based on flue gas properties					根据烟气性质选用 Selection based on flue gas properties			
过滤风速(m/min) Filter wind speed(m/min)		0.8-2.0 (根据不同的扬尘点选取不同的净化过滤风速)					1.2-2.0 (根据不同的扬尘点选取不同的净化过滤风速)			
承受负压(pa) Bear negative pressure(PA)		⩽6000					⩽5000			
除尘器阻力(pa) Filter resistance(PA)		1470-1770					⩽1200			
入口气体含尘浓度(Nm^3) Dust concentration of inlet gas(Nm3)		⩽1300					＜200			
喷吹压力(Mpa) Blowing pressure(Mpa)		0.5-0.7					0.3-0.5			
压缩空气耗量(Nm^3/min) Compressed air consumption(Nm3 / min)		1.2	1.5	1.8	2.1	2.4	0.15	0.20	0.29	0.34
锁风装置 A lock device		根据工艺情况需要确定 Determine according to process conditions								
螺旋输送机 Spiral conveyor		根据工艺情况需要确定 Determine according to process conditions								
保温面积(㎡) Thermal insulation area(M2)		110	120	130	140	150				
风机用电功率（kw） Wind Power(KW)							2.2	3.0	6.5	7.5
总量(kg)	A						1620	1850	2800	3200
	B						1470	1670	2540	2880

注：规格型号如有变动，恕不另行通知。
Note: Specifications and models are subject to change without notice.

NE/TH BUCKET ELEVATOR
NE/TH斗式提升机

设备简介
Introduction

斗式提升机是利用均匀固接于无端牵引构件上的一系列料斗，竖向提升物料的连续输送机械。具有输送量大，提升高度高，运行平稳可靠，寿命长等显著优点。

其适于输送粉状，粒状及小块状的无磨琢性及磨琢性小的物料，如：煤、水泥、石块、砂、粘土、矿石等，由于提升机的牵引机构是环行链条，因此允许输送温度较高的材料(物料温度不超过250 ℃)。一般输送高度最高可达40米到80米。

The bucket elevator is a continuous conveying machine that vertically lifts materials by using a series of hoppers that are uniformly fixed to the endless traction members. It has the advantages of large conveying capacity, high lifting height, stable and reliable operation and long service life.

It is suitable for conveying powdery, granular and small pieces of non-abrasive and abrasive materials such as coal, cement, stones, sand, clay, ore, etc., because the traction mechanism of the hoist is a circular chain Therefore, it is allowed to transport materials with a higher temperature (the material temperature does not exceed 250 ° C). The general conveying height can be up to 40 meters to 80 meters.

工作原理
Working Principle

斗式提升机是利用均匀固接于无端牵引构件上的一系列料斗，竖向提升物料的连续输送机械。其输送工作原理是，料斗把物料从下面的储藏中舀起，随着输送带或链提升到顶部，绕过顶轮后向下翻转，斗式提升机将物料倾入接受槽内。带传动的斗式提升机的传动带一般采用橡胶带，装在下或上面的传动滚筒和上下面的改向滚筒上。链传动的斗式提升机一般装有两条平行的传动链，上或下面有一对传动链轮，下或上面是一对改向链轮。

The bucket elevator is a continuous conveying machine that vertically lifts materials by using a series of hoppers that are uniformly fixed to the endless traction members. Its conveying principle is that the hopper picks up the material from the underlying storage, and as the conveyor belt or chain is lifted to the top, it bypasses the top wheel and then turns down. The bucket elevator pours the material into the receiving tank. The drive belt of the belt-operated bucket elevator is generally a rubber belt that is mounted on the lower or upper drive roller and the upper and lower redirecting rollers. The chain drive bucket elevator is generally equipped with two parallel drive chains with a pair of drive sprockets on the upper or lower side and a pair of reversing sprockets on the bottom or the top.

产品参数
Main Specification

型 号 Type	提升量 No. of enhancements	料斗 Hopper			运行部件重量 Running part weight	物料最大块度 Maximum mass of material				
						占百分比% By percentage				
	m³/h	容积(L) volume	斗距(mm) Barrage	斗速(m/min) Battle speed		10	25	50	75	100
NE15	15	2.5	203.2	29.8	28	65	50	40	30	25
NE30	32	7.8	304.8	30.1	35	90	75	58	47	40
NE50	60	4.7	304.8	30.1	64	90	75	58	47	40
NE100	110	35	400	31	89	130	105	80	65	55
NE150	170	52.2	400	31	112	130	105	80	65	55
NE200	210	84.6	500	30	134	170	135	100	85	70
TH250	8-10	3.75-6	512	1.4	-	-	-	-	-	-
TH300	10-15	5.9-9.5	512	1.4	-	-	-	-	-	-
TH400	15-20	9.3-15	688	1.5	-	-	-	-	-	-

注：料斗填充系数按0.7计算　　Note: Filling factor for Hopper is calculated at 0.7

注：规格型号如有变动，恕不另行通知。
Note: Specifications and models are subject to change without notice.

EXPRESSWAY SANDSTONE AGGREGATE CASE
高速公路砂石骨料案例

应用范围：适用于高速公路、城市建设、机场建设等行业的应用。

生产流程：开采的石头先由振动给料机送料给颚式破碎机进行初步破碎，二级破碎由圆锥破完成，圆锥破出来的物料上振动筛进行筛分，大于40mm的物料返回圆锥破重新破碎，形成闭路循环，小于40mm的物料进入立式冲击破进行整形破碎。立式冲击破出来的物料上成品筛进行筛分，大于20mm的返回立式冲击破循环破碎，小于20mm的物料经皮带机输送至各个成品料堆。

Application: Suitable for applications in highways, urban construction, airport construction and other industries.

Production process: The mined stone is firstly fed by the vibrating feeder to the jaw crusher for preliminary crushing. The secondary crushing is completed by the cone breaking. The material broken by the cone is sieved on the vibrating screen, and the material larger than 40mm is returned to the cone. Broken, forming a closed loop, less than 40mm of material into the vertical impact to break the plastic fracture. The finished product sieved by the vertical impact material is sieved, and the returning vertical impact breaking cycle of more than 20 mm is broken, and the materials less than 20 mm are conveyed to the respective finished material piles by the belt conveyor.

WET SAND MAKING CASE
湿法制砂案例

应用范围：适用于水电、高速公路、城市建设等行业的应用，成品粒度可根据用户的不同需要进行组合和分级。

工艺流程：0-40mm的骨料经悬挂式给料机，胶带输送机输送至立式冲击破进行破碎，冲击破出来的物料上振动筛进行筛分，大于5mm的物料返回冲击破重新破碎，形成闭路循环。小于5mm的物料进入洗砂机清洗，清洗过的物料经胶带输送机输送至成品料堆。为了保证机制砂的细度模数和级配，清洗过砂子的污水可以进入细沙回收系统，回收其中0.16mm以下的细砂。

Application: Applicable to the application of hydropower, highway, urban construction and other industries, the granularity of finished products can be combined and graded according to the different needs of users.

Process: 0-40mm aggregate is transported by the hanging feeder, the belt conveyor is transported to the vertical impact to break, and the impacted material is sieved on the vibrating screen. The material larger than 5mm is returned to the impact and broken again. Form a closed loop. The material less than 5mm enters the sand washing machine for cleaning, and the cleaned material is transported to the finished material pile through the belt conveyor. In order to ensure the fineness modulus and gradation of the mechanism sand, the sewage washed with sand can enter the fine sand recovery system to recover fine sand below 0.16mm.

DRY SAND MAKING CASE
干法制砂案例

应用范围：适用于高速公路、城市建设、机场建设等行业的应用。
生产流程：0-40mm的骨料经悬挂式给料机，胶带输送机输送至立式冲击破进行破碎，冲击破出来的物料上一个二层振动筛进行筛分，大于5mm的物料返回冲击破重新破碎，形成闭路循环。3-5mm的物料根据出料要求可以部分出成品，部分返回冲击破重新破碎。小于3mm的物料进入粗细粉分离机，分离出0-0.075mm的石粉。0.075-3mm和3-5mm的料组成成品料堆。根据环保要求可选配脉冲袋式除尘器。

Application: Suitable for applications in highways, urban construction, airport construction and other industries.
Production process:The aggregate of 0-40mm is transported by the hanging feeder, the belt conveyor is transported to the vertical impact to break, and the material broken by the impact is sieved on a two-layer vibrating screen. The material larger than 5mm is returned to the impact and broken again. Form a closed loop. The 3-5mm material can be partially finished according to the discharge requirements, and some of the returned impact breaks and breaks again. The material of less than 3 mm enters the coarse and fine powder separator, and the stone powder of 0-0.075 mm is separated. The 0.075-3mm and 3-5mm materials constitute the finished material pile. Pulse bag type dust collector can be selected according to environmental protection requirements.

GRANITE CRUSHING CASE
花岗岩破碎案例

应用范围：矿山、煤矿、水泥等行业。

生产线基本流程：石料由振动给料机均匀地送到颚式破碎机进行粗破，粗破后的物料由胶带输送机送入到粗碎圆锥破进行进一步破碎，破碎后的物料被输送到振动筛进行筛分，达到成品粒度要求的物料通过胶带运输机输送到成品料堆；未达到成品粒度要求的物料从振动筛返回中碎或细碎圆锥破加工，形成闭路循环。成品粒度可按用户的需求进行组合和分级。

Applications: Mining, coal, cement and other industries.

The basic process of the production line: the stone material is evenly sent to the jaw crusher for rough breaking by the vibrating feeder. The coarsely broken material is sent by the belt conveyor to the coarse crushed cone for further crushing, and the crushed material is transported to the vibration. The sieve is sieved, and the material that meets the particle size requirements of the finished product is transported to the finished product pile through the belt conveyor; the material that does not meet the requirements of the finished grain size is returned from the vibrating screen to the broken or finely divided cone to form a closed loop. Finished product granularity can be combined and graded according to user needs.

LIMESTONE CRUSHING CASE
石灰石破碎案例

应用范围：矿山、煤矿、水泥等行业。

基本流程：首先从山上爆破下来的石头通过喂料机均匀地喂入颚式破碎机初步破碎，经粗碎后的半成品通过皮带输送机输送至反击式破碎机进一步破碎，二次破碎后的石料通过皮带输送机输送至振动筛筛分出不同规格的石子，满足客户粒度要求的石子通过皮带输送机输送至成品料堆，大于上层筛网尺寸的石子通过皮带输送机重新返回至反击式破碎机再次破碎，形成闭路循环。

Applications: Mining, coal, cement and other industries.

Basic process: Firstly, the stone blasted from the mountain is uniformly fed into the jaw crusher through the feeder to be initially crushed. The coarsely crushed semi-finished product is transported to the impact crusher through the belt conveyor for further crushing, and the crushed stone is crushed. The belt conveyor conveys to the vibrating screen and separates the stones of different specifications. The stones that meet the customer's grain size requirements are transported to the finished material pile through the belt conveyor. The stones larger than the upper screen size are returned to the impact crusher through the belt conveyor. Break again and form a closed loop.

BASALT CRUSHING CASE
玄武岩破碎方案

应用范围：玄武岩破碎、矿山、煤矿、水泥等行业。

基本流程：石料由振动给料机均匀地送到颚式破碎机进行粗破，粗破后的物料由胶带输送机送入到粗碎圆锥破进行进一步破碎，破碎后的物料被输送到振动筛进行筛分，达到成品粒度要求的物料通过胶带运输机输送到成品料堆；未达到成品粒度要求的物料从振动筛返回中碎或细碎圆锥破加工，形成闭路循环。成品粒度可按用户的需求进行组合和分级。

Application: Basalt crushing, mining, coal mining, cement and other industries.

Basic process: The stone material is evenly sent to the jaw crusher by the vibrating feeder for coarse breaking. The rough broken material is sent to the coarse crushing cone for further crushing by the belt conveyor, and the crushed material is transported to the vibrating screen. The materials that are sieved to meet the particle size requirements of the finished product are transported to the finished product pile through the belt conveyor; the materials that do not meet the requirements of the finished grain size are returned to the broken or finely divided cones from the vibrating screen to form a closed loop. Finished product granularity can be combined and graded according to user needs.

RIVER PEBBLE SAND CASE
河卵石制砂案例

应用范围：河卵石生产线，河卵石破碎。
基本流程：以200mm以下河卵石为例：物料在原料仓经由给料机、皮带机输送至1#振动筛进行预筛分，大于40mm的物料进入圆锥破进行破碎，5-40mm的进入立式冲击破进行破碎，0-5mm的进入洗砂机清洗后直接出成品。圆锥破破碎后的产品上2#振动筛筛分，大于40mm的返回圆锥破重新破碎，形成闭路循环，小于40mm的进入立式冲击破破碎。立式冲击破出来的料上3#振动筛筛分，大于20mm的返回立式冲击破进行破碎，形成闭路循环，小于20mm的物料经由皮带机输送至成品料堆，根据原料的洁净程度可考虑将0-5mm的物料送至洗砂机清洗。

Application: river pebble production line, river pebble broken.
Basic process: Take the river pebble below 200mm as an example: the material is pre-screened in the raw material warehouse through the feeder and belt conveyor to the 1# vibrating screen. The material larger than 40mm enters the cone to break and break, and the 5-40mm enters the vertical The impact is broken and crushed, and the 0-5mm enters the sand washing machine to clean and directly discharge the finished product. After the cone is broken and crushed, the 2# vibrating screen is sieved, and the return cone larger than 40mm is broken and broken again to form a closed circuit.Circulation, less than 40mm into the vertical impact breakage. The 3# vibrating screen is sifted on the vertical impact, and the vertical vertical impact of more than 20mm is broken to form a closed loop. The less than 20mm material is transported to the finished material pile via the belt conveyor, which can be considered according to the cleanliness of the raw materials. The 0-5mm material is sent to the sand washer for cleaning.

IRON ORE CRUSHING CASE
铁矿石破碎案例

应用范围：铁矿石破碎生产线、矿山、煤矿、水泥等行业。

基本流程：铁矿石由振动给料机均匀地送到颚式破碎机进行粗破，粗破后的物料由胶带输送机送入到粗碎圆锥破进行进一步破碎，破碎后的物料被输送到振动筛进行筛分，达到成品粒度要求的物料通过胶带运输机输送到成品料堆；未达到成品粒度要求的物料从振动筛返回中碎或细碎圆锥破加工，形成闭路循环。成品粒度可按用户的需求进行组合和分级。

Applications: Iron ore crushing production line, mining, coal mining, cement and other industries.

Basic process: The iron ore is uniformly sent to the jaw crusher by the vibrating feeder for coarse breaking. The coarsely broken material is sent by the belt conveyor to the coarse crushed cone for further crushing, and the crushed material is transported to the vibrating screen. The material that has been sieved to meet the particle size requirements of the finished product is transported to the finished product pile through the belt conveyor; the material that does not meet the particle size requirements of the finished product is returned from the vibrating screen to the broken or finely divided cone to form a closed loop. Finished product granularity can be combined and graded according to user needs.

MOBILE CRUSHING STATION CASE
移动破碎站案例

砂 / 石 / 骨 / 料 / 案 / 例 SAND AGGREGATE CASE

应用范围：矿山、煤矿、水泥等行业。
适用物料：硬岩破碎、骨料生产、露天采场内破碎以及采矿、沥青混凝土料、建筑垃圾等。
设备简介：移动破碎站多机组合是目前最常见的组合破碎站，也是目前生产率最高的组合破碎站，对于中小产量需求、经常移动作业环境、独立完成客户生产石料的需求，多级组合移动破碎站是最佳选择。其主要是由振动筛，颚破，圆锥破，反击破，冲击破等按照粗碎，中碎，细碎的不同种类然后相结合的一种设备，是目前客户的最好选择，多元化的二级破碎站能够自载输送筛分，全方位的移动完成工作。

Applications: Mining, coal, cement and other industries.
Applicable materials: hard rock crushing, aggregate production, crushing in open pit and mining, asphalt concrete, construction waste, etc.

Equipment introduction: The multi-machine combination of mobile crushing station is the most common combined crushing station at present, and it is also the most productive combined crushing station at present. For the small and medium-sized production demand, the frequent moving working environment, and the independent completion of the customer's demand for stone production, multi-level combined mobile crushing Station is the best choice. It is mainly a kind of equipment which is composed of vibrating screen, smashing, cone breaking, counter-breaking, impact breaking, etc. according to different types of coarse crushing, medium crushing and fine crushing. It is the best choice for customers at present, diversified two. The level crushing station is capable of self-loading and screening, and completes the work in all directions.

MILL MACHINE CASE
磨粉机案例

应用范围：广泛应用于冶金、建材、化工、矿山等领域内矿产品物料的粉磨加工，适宜加工莫氏硬度9.3级以下，湿度在6%以下的各种非易燃易爆矿石，如石膏、滑石、方解石、石灰石、大理石、钾长石、重晶石、白云石、花岗岩、高岭土、麦饭石、铝矾土、氧化铁红、铁矿等，成品细度在613μm~440μm(0.613mm-0.44mm)之间，通过分析机及风机的共同作用，可满足不同用户的使用要求。

设备简介：R型摆式磨粉机，原名悬辊式磨粉机，又称为雷蒙磨、雷蒙磨粉机、悬辊式盘磨机、环滚研磨机、摆轮式研磨机，是一种以"环-辊"碾磨结合气流筛选、气力输送形式的制粉设备，是一种干式超精细粉体加工和分级磨机。

Application: It is widely used in the grinding of mineral products in metallurgy, building materials, chemical industry, mining and other fields. It is suitable for processing non-inflammable and explosive ore with Mohs hardness below 9.3 and humidity below 6%, such as gypsum and talc. Calcite, limestone, marble, potassium feldspar, barite, dolomite, granite, kaolin, medical stone, bauxite, iron oxide red, iron ore, etc., fineness of the finished product is 613μm~440μm (0.613mm-0.44mm Between the analysis machine and the fan, the requirements of different users can be met.

Equipment Description: R-type pendulum mill, formerly known as the suspension roller mill, also known as Raymond mill, Raymond mill, suspension roller mill, ring roller mill, balance wheel mill, It is a kind of milling equipment with "ring-roller" milling combined with airflow screening and pneumatic conveying. It is a dry superfine powder processing and classifying mill.